STATE OF VERMONT
AGENCY OF TRANSPORTATION

PROPOSED IMPROVEMENT
BRIDGE PROJECT

BRADFORD
COUNTY OF ORANGE
EIGHT BRIDGES ON I-91

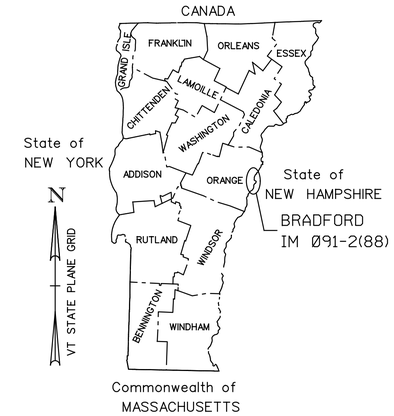

INDEX OF SHEETS

1	TITLE SHEET
2	PROJECT NOTES
3	QUANTITY SHEET 1
4	QUANTITY SHEET 2
5	BRIDGE MAINTENANCE REPAIR SUMMARY
6	REPAIR LAYOUT SHEET 1
7	REPAIR LAYOUT SHEET 2
8	SUPERSTRUCTURE REPAIR DETAILS
9	PAVEMENT AND MEMBRANE PLAN
1Ø	BEAM SEAT REPAIRS
11	JOINT REPLACEMENT DETAIL SHEET 1
12	JOINT REPLACEMENT DETAIL SHEET 2
13	RAIL REPAIR DETAILS
14	TRAFFIC CONTROL SUMMARY SHEET
15-17	REFERENCE SHEETS BRIDGE 58N&S
18-19	REFERENCE SHEETS BRIDGE 59N&S
2Ø-21	REFERENCE SHEETS BRIDGE 6ØN&S
22-23	REFERENCE SHEETS BRIDGE 61N&S
24-26	REFERENCE SHEETS ALUMINUM BRIDGE RAIL

STANDARD SHEETS

T-11	Ø8-Ø6-2Ø12
T-12	Ø8-Ø6-2Ø12
T-13	Ø8-Ø6-2Ø12
T-23	Ø8-Ø6-2Ø12
SD-516.1Ø	Ø8-29-2Ø11
SD-516.11A	Ø2-24-2Ø11
SD-516.11B	Ø2-24-2Ø11

PROJECT LOCATION:

BRADFORD	BRIDGES 58N AND 58S (I-91 OVER VT 25) (MM 97.63)
BRADFORD	BRIDGES 59N AND 59S (I-91 OVER WAITS RIVER) (MM 97.88)
BRADFORD	BRIDGES 6ØN AND 6ØS (I-91 OVER VT 25B) (MM 97.97)
BRADFORD	BRIDGES 61N AND 61S (I-91 OVER TH 6) (MM 98.43)

PROJECT DESCRIPTION: THIS PROJECT INVOLVES PREVENTATIVE MAINTENANCE REPAIRS TO EXISTING BRIDGES, AND ASSOCIATED WORK.

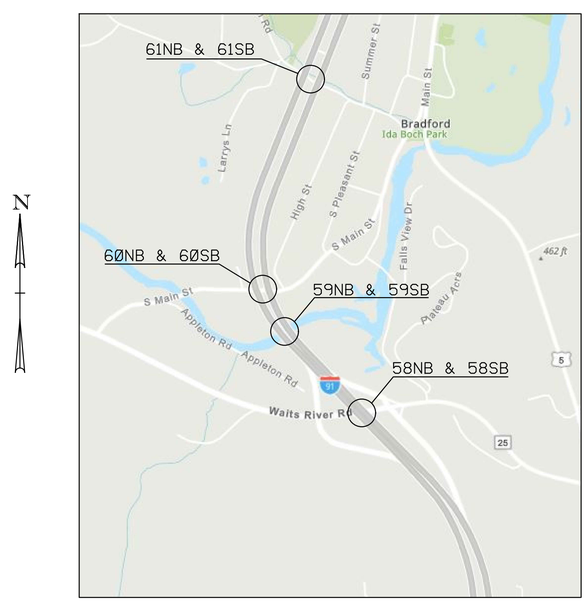

PROJECT LIMITS PLAN
NOT TO SCALE

CONSTRUCTION IS TO BE CARRIED ON IN ACCORDANCE WITH THESE PLANS AND THE STANDARD SPECIFICATIONS FOR CONSTRUCTION DATED 2018, AS APPROVED BY THE FEDERAL HIGHWAY ADMINISTRATION ON APRIL 13, 2018 FOR USE ON THIS PROJECT, INCLUDING ALL SUBSEQUENT REVISIONS AND SUCH REVISED SPECIFICATIONS AND SPECIAL PROVISIONS AS ARE INCORPORATED IN THESE PLANS.

QUALITY ASSURANCE PROGRAM : LEVEL

SURVEYED BY : N/A
SURVEYED DATE : N/A

DATUM
VERTICAL N/A
HORIZONTAL N/A

Hardesty & Hanover

PROJECT MANAGER : GARY SWEENY

PROJECT NAME : BRADFORD
PROJECT NUMBER : IM Ø91-2(88)

PROJECT NOTES:

1. ALL MATERIALS AND CONSTRUCTION SHALL CONFORM TO THE STATE OF VERMONT AGENCY OF TRANSPORTATION 2018 STANDARD SPECIFICATIONS FOR CONSTRUCTION, THE LATEST GENERAL SPECIAL REVISIONS, AND THE CONTRACT SPECIAL PROVISIONS.

2. UTILITIES THAT ARE PRESENT ON THE STRUCTURES SHALL NOT BE DAMAGED AND MUST BE PROTECTED BY THE CONTRACTOR DURING CONSTRUCTION. THE UTILITIES LISTED BELOW ARE FOR INFORMATIONAL PURPOSES AND DO NOT RELIEVE THE CONTRACTOR FROM INDEPENDENTLY VERIFYING THE LOCATION OF UTILITIES WITHIN THE LIMITS OF CONSTRUCTION.

   BRIDGES 60N&S - UNDERGROUND UTILITIES ALONG ROUTE 25B: TOWN OF BRADFORD WATER, CONSOLIDATED COMMUNICATIONS, CHARTER COMMUNICATIONS
   BRIDGES 61N&S - AERIAL UTILITIES ALONG GOSHEN RD: CHARTER COMMUNICATIONS
   - UNDERGROUND UTILITIES ALONG GOSHEN RD: CONSOLIDATED COMMUNICATIONS

3. ALL DIMENSIONS AND SKEW ANGLES SHOWN FOR EXISTING BRIDGE FEATURES ARE FROM RECORD PLANS AND ARE APPROXIMATE. THE CONTRACTOR SHALL FIELD VERIFY DIMENSIONS AS NEEDED AND WILL SUBMIT FABRICATION DRAWINGS FOR ALL REPAIR ACTIVITIES.

4. DURING CONSTRUCTION OF THE BRIDGE MAINTENANCE REPAIRS AND THE IMPLEMENTATION OF TEMPORARY TRAFFIC CONTROL MEASURES, ALL CONSTRUCTION VEHICLES WILL REMAIN WITHIN THE LIMITS OF THE BRIDGE EMBANKMENT TOE OF SLOPE.

5. ALL REPAIRS AND CONSTRUCTION ACTIVITY ON THE BRIDGES SHALL BE ACCOMPLISHED USING PHASED TEMPORARY TRAFFIC CLOSURES OF ONE LANE OF I-91.

6. WATER REPELLENT, SILANE SHALL BE APPLIED TO EXPOSED CONCRETE SURFACES AS SHOWN IN THE WATER REPELLENT DETAIL. THIS WORK WILL BE PAID FOR UNDER ITEM 514.10, "WATER REPELLENT, SILANE".

7. FOLLOWING THE COMPLETION OF ALL OTHER CONSTRUCTION ACTIVITIES AT EACH BRIDGE, ALL BEAM SEATS, BRIDGE EXPANSION JOINT TROUGHS, SCUPPERS, AND DOWNSPOUTS WITHIN THE LIMITS OF CONSTRUCTION SHALL BE CLEANED OF DEBRIS AND SHALL BE THOROUGHLY FLUSHED WITH WATER. THE COST FOR REMOVING DEBRIS AND FLUSHING SHALL BE PAID FOR UNDER ITEM 900.6XX, "SPECIAL PROVISION, (MISCELLANEOUS BRIDGE CLEANING)".

PAVEMENT REMOVAL:

1. THE FINAL ONE HALF INCH OF PAVEMENT ON THE CONCRETE BRIDGE DECK (AND AT- GRADE APPROACH SLABS IF APPLICABLE) SHALL BE REMOVED BY LOADER, GRADER, OR EQUIPMENT APPROVED BY THE ENGINEER. COLD PLANING TO REMOVE BRIDGE PAVEMENT WILL BE INCIDENTAL TO ITEM 529.10, "REMOVAL OF BRIDGE PAVEMENT".

2. DURING BRIDGE (AND AT- GRADE APPROACH SLAB IF APPLICABLE) PAVEMENT REMOVAL, THE CONTRACTOR SHALL EXERCISE CARE TO INSURE THAT NO DAMAGE OCCURS TO THE EXISTING CONCRETE BRIDGE DECK (AND THE EXISTING APPROACH SLAB IF APPLICABLE). ANY DAMAGE TO THE CONCRETE BRIDGE DECK (OR AT- GRADE APPROACH SLAB IF APPLICABLE) SHALL BE REPAIRED AT THE CONTRACTOR'S EXPENSE. REPAIRS SHALL BE MADE IN ACCORDANCE WITH SECTION 580.

3. CARE SHALL BE TAKEN TO PROTECT ANY SCUPPERS OR DROP INLETS AT ALL STAGES OF CONSTRUCTION. ANY DAMAGE TO THESE STRUCTURES SHALL BE REPAIRED TO THE SATISFACTION OF THE ENGINEER AND AT THE CONTRACTOR'S EXPENSE.

4. AFTER THE REMOVAL OF THE BRIDGE PAVEMENT, THE BARRIER MEMBRANE SHALL BE REMOVED AND THE CONCRETE BRIDGE DECK (AND AT- GRADE APPROACH SLABS IF APPLICABLE) SHALL BE CLEANED IN ACCORDANCE WITH SUBSECTION 580.04 TO THE SATISFACTION OF THE ENGINEER. INCLUDING THE VERTICAL FACE OF CURB. REMOVAL OF THE BARRIER MEMBRANE AND THE CLEANING OF THE CONCRETE BRIDGE DECK WILL BE PAID FOR UNDER ITEM 580.16, "SURFACE PREPARATION FOR MEMBRANE".

5. ANY REPAIR WORK REQUIRING THE USE OF ITEM 580.20, "RAPID SETTING CONCRETE REPAIR MATERIAL WITH COARSE AGGREGATE" SHALL BE APPROVED BY THE ENGINEER.

PAVEMENT AND MEMBRANE:

1. UPON THE ENGINEER'S APPROVAL OF THE CONCRETE BRIDGE DECK'S CONDITION, ITEM 519.20, "SHEET MEMBRANE WATERPROOFING, TORCH APPLIED" SHALL BE INSTALLED IN ACCORDANCE WITH SECTION 519. THE CONTRACTOR SHALL NOT INSTALL ITEM 519.20, "SHEET MEMBRANE WATERPROOFING, TORCH APPLIED" WHEN THE DECK CONCRETE AND/OR DECK PATCH AREAS' MOISTURE CONTENT IS ABOVE SECTION 519 SPECIFICATIONS OR MANUFACTURER'S SPECIFICATIONS, WHICHEVER IS LESS.

PAVEMENT AND MEMBRANE (CONTINUED):

2. FOR BRIDGES WHICH DO NOT HAVE NORMAL CROWN DECK CROSS SLOPES, THE SHEET MEMBRANE WATERPROOFING SHALL BE INSTALLED BEGINNING AT THE LOWEST DECK ELEVATION AND CONTINUE TOWARD THE HIGHEST DECK ELEVATION IN A SHINGLED PATTERN. PHASED TEMPORARY TRAFFIC CLOSURES OF ONE LANE OF I-91 SHALL COINCIDE WITH THE DECK SUPERELEVATION.

3. FOLLOWING THE INSTALLATION OF THE NEW SHEET MEMBRANE WATERPROOFING ON THE CONCRETE BRIDGE DECK. THE CONCRETE BRIDGE DECK (AND THE AT- GRADE APPROACH SLABS IF APPLICABLE) SHALL BE PAVED CURB TO CURB WITH ITEM 900.680. "SPECIAL PROVISION (BITUMINOUS CONCRETE PAVEMENT, SMALL QUANTITY)" IN TWO 1 ½" LIFTS.

4. CARE SHALL BE EXERCISED TO SMOOTHLY TRANSITION THE NEW BRIDGE PAVEMENT INTO THE EXISTING PAVEMENT. ANY COLD PLANNING NECESSARY FOR SHAPING BRIDGE APPROACHES SHALL BE SUBSIDIARY TO REMOVAL OF BRIDGE PAVEMENT, ITEM 529.10.

5. EMULSIFIED ASPHALT SHALL BE APPLIED AT A RATE OF 0.08 GAL/SY TO ALL COLD PLANED SURFACES AND AT A RATE OF 0.03 TO 0.04 GAL/SY BETWEEN PAVEMENT LIFTS. PAYMENT SHALL BE UNDER ITEM 404.65, "EMULSIFIED ASPHALT".

6. THE CONTRACTOR SHALL INSTALL TEMPORARY PAVEMENT MARKINGS ON ALL PAVED SURFACES THAT WILL NOT HAVE THE PERMANENT MARKING APPLIED WITHIN 14 CALENDAR DAYS OF THE FINAL PAVING OPERATIONS AS DIRECTED BY THE ENGINEER.

7. UPON COMPLETION OF ALL PAVING OPERATIONS FINAL PAVEMENT MARKINGS SHALL BE INSTALLED TO REPLICATE EXISTING CONFIGURATION.

TRAFFIC CONTROL:

1. THE CONTRACTOR SHALL SUBMIT SITE SPECIFIC TRAFFIC CONTROL PLANS DEPICTING EACH PHASE OF THE PLANNED WORK ON I-91 AND OTHER ROADWAYS. THE DESIGNS SHALL ENSURE THAT VEHICULAR TRAFFIC IS MAINTAINED WITHIN THE EXISTING EDGES OF ROADWAYS AND THAT STATE-REGULATED WIDE LOAD CAN BE ACCOMMODATED DURING LANE CLOSURES. THE MINIMUM WIDTH OF ROADWAY THROUGH WORK ZONES WILL BE AN 11'-WIDE LANE WITH A 1'-WIDE SHOULDER. ACCOMMODATION WILL BE MADE FOR WIDE LOADS.

2. SITE SPECIFIC TRAFFIC CONTROL PLANS SHALL BE SUBMITTED IN ACCORDANCE WITH SECTION 641 AND SUBSECTION 105.03 AND SHALL BE STAMPED BY A PROFESSIONAL ENGINEER LICENSED IN AN APPROPRIATE DISCIPLINE IN THE STATE OF VERMONT. PAYMENT FOR SUBMITTING THE TRAFFIC CONTROL PLANS AND MAKING ANY NECESSARY REVISIONS TO THE PLAN WILL BE INCLUDED IN THE UNIT BID PRICE FOR ITEM 641.11, "TRAFFIC CONTROL, ALL INCLUSIVE". THE CONTRACTOR SHALL ALLOW TWO WEEKS FOR APPROVAL OF THE TRAFFIC CONTROL PLANS. NO WORK SHALL COMMENCE UNTIL THE CONTRACTOR HAS AN APPROVED TRAFFIC CONTROL PLAN FOR EACH BRIDGE.

3. THE TRAFFIC CONTROL PLANS SHALL SHOW ALL RAMPS AND I-91 ACCELERATION LANES AND DECELERATION LANES.

4. THE TRAFFIC CONTROL DEVICES SHOWN ON THESE PLANS ARE FOR ILLUSTRATIVE PURPOSES AND DO NOT RELIEVE THE CONTRACTOR FROM ADHERING TO ALL VTRANS TRAFFIC CONTROL STANDARDS, REQUIREMENTS, AND SPECIFICATIONS. ALL TRAFFIC CONTROL DEVICES SHALL BE IN ACCORDANCE WITH THE 2009 MUTCD AND ITS LATEST REVISIONS. WHERE CONFLICTS EXIST BETWEEN AOT STANDARDS AND THE MUTCD, THE MUTCD SHALL GOVERN.

5. UNLESS COVERED UNDER INDIVIDUAL PAY ITEMS, ALL COSTS FOR TEMPORARY TRAFFIC CONTROL DEVICES SHALL BE INCLUDED IN THE CONTRACT LUMP SUM PRICE FOR ITEM 641.11, "TRAFFIC CONTROL, ALL INCLUSIVE".

6. THE PORTABLE CHANGEABLE MESSAGE SIGNS (PCMS) AND PRINT MEDIA SHALL BE IMPLEMENTED 2 WEEKS IN ADVANCE OF LANE CLOSURES AS DIRECTED BY THE ENGINEER. PAYMENT SHALL BE MADE UNDER ITEM 641.15 "PORTABLE CHANGEABLE MESSAGE SIGN."

STATE OF VERMONT
AGENCY OF TRANSPORTATION

QUANTITY SHEET 1

SUMMARY OF ESTIMATED QUANTITIES										TOTALS		DESCRIPTIONS				DETAILED SUMMARY OF QUANTITIES		
ROADWAY	BRIDGE NO. 58N	BRIDGE NO. 58S	BRIDGE NO. 59N	BRIDGE NO. 59S	BRIDGE NO. 60N	BRIDGE NO. 60S	BRIDGE NO. 61N	BRIDGE NO. 61S	FULL C.E. ITEMS	GRAND TOTAL	FINAL	UNIT	ITEMS	ITEM NUMBER	ROUND	QUANTITIES	UNIT	ITEMS
	13	13	13	14	8	9	8	8		86		CWT	EMULSIFIED ASPHALT	404.65				
672										672		LU	PRICE ADJUSTMENT, ASPHALT CEMENT (N.A.B.I.)	406.50				
	1									1		LS	SHORING SUPERSTRUCTURE	502.10				
			200							200		lb.	STRUCTURAL STEEL	506.60				
	600		90	220	75	75		265		1325		lb.	REINFORCING STEEL, LEVEL I	507.11				
	106		6	12				40		164		LF	DRILLING AND GROUTING DOWELS	507.16				
	11	11	12	13	7	8	7	6		75		GAL	WATER REPELLENT, SILANE	514.10				
	159	159	174	174	137	139	130	135		1207		LF	BRIDGE EXPANSION JOINT, ASPHALTIC PLUG	516.10				
			44	43	46	46				179		LF	BRIDGE EXPANSION JOINT, VERMONT	516.11				
			44	43	46	46				179		LF	PARTIAL REMOVAL AND MODIFICATION OF BRIDGE JOINT	516.20				
	966	966	1097	1184	594	699	656	533		6695		SY	SHEET MEMBRANE WATERPROOFING, TORCH APPLIED	519.20				
	159	159	174	174	137	139	130	135		1207		LF	JOINT SEALER, HOT POURED	524.11				
	1265	1265	1280	1370	830	945	835	760		8550		SY	REMOVAL OF BRIDGE PAVEMENT	529.10				
	32	32	37	40	20	24	22	18		225		SY	REPAIR OF CONCRETE SUPERSTRUCTURE SURFACE, CLASS I	580.10				
	36							24		60		SY	REPAIR OF CONCRETE SUPERSTRUCTURE SURFACE, CLASS II	580.11				
	1		1	2	1	1				6		CY	REPAIR OF CONCRETE SUPERSTRUCTURE SURFACE, CLASS III	580.12				
	2									2		c.y.	REPAIR OF CONCRETE SUBSTRUCTURE SURFACE, CLASS III	580.15				
	11354	11354	11501	12328	7456	8467	7474	6816		76750		SF	SURFACE PREPARATION FOR MEMBRANE	580.16				
	11	11	19	19	10	10	10	10		100		CF	RAPID SETTING CONCRETE REPAIR MATERIAL, WITH COARSE AGGREGATE	580.20				
	32							32		64		HR	TRUCK MOUNTED ATTENUATOR	608.45				
		11					7			18		GAL	REPOINTING GRANITE BRIDGE CURB	616.225				
	460	460	510	510	390	390	390	390		3500		LF	REMOVE AND RESET TRAFFIC BARRIER	621.90				
	460	460	510	510	390	390	390	390		3500		LF	REMOVE AND RESET TEMPORARY TRAFFIC BARRIER	621.95				
	120	40	40	40	40	40	40	40		400		hr	UNIFORMED TRAFFIC OFFICERS	630.10				
	120	40	40	40	40	40	40	40		400		hr	FLAGGERS	630.15				
									1	1		LS	FIELD OFFICE, ENGINEERS	631.10				
									1	1		LS	TESTING EQUIPMENT, CONCRETE	631.16				
									1	1		LS	TESTING EQUIPMENT, BITUMINOUS	631.17				
									3000	3000		$	FIELD OFFICE COMMUNICATIONS (N.A.B.I.)	631.26				
									1	1		LS	MOBILIZATION/DEMOBILIZATION	635.11				
	0.125	0.125	0.125	0.125	0.125	0.125	0.125	0.125		1		LS	TRAFFIC CONTROL (BRIDGES 58N,58S,59N,59S,60N,60S,61N,61S)	641.11				
	1							1		2		EA	PORTABLE CHANGEABLE MESSAGE SIGN	641.15				
	2	1						1		4		EA	PORTABLE ARROW BOARD	641.16				
	9360	2240	1900	2300	5000	1200	1920	9120		33040		LF	TEMPORARY 4 IN WHITE LINE, TEMP PAVEMENT MARKING TAPE	646.6011				
			220	220						440		LF	TEMPORARY 4 IN YELLOW LINE, TEMP PAVEMENT MARKING TAPE	646.6111				
	220							220		440		SF	REMOVAL OF EXISTING PAVEMENT MARKINGS	646.85				
	1		1	1						3		LS	SPECIAL PROVISION (PUBLIC PROTECTION FOR BRIDGE PROJECTS)	900.645				
	1	1	1	1	1	1	1	1		8		LU	SPECIAL PROVISION (MAT DENSITY ADJUSTMENT, SMALL QUANTITY) (N.A.B.I.)	900.6501				
	1	1	1	1	1	1	1	1		8		LU	SPECIAL PROVISION (MIXTURE PAY ADJUSTMENT) (N.A.B.I.)	900.6502				
	211	211	213	229	139	157	139	127		1426		TONS	SPECIAL PROVISION (BITUMINOUS CONCRETE PAVEMENT, SMALL QUANTITY)	900.680				

Hardesty & Hanover

PROJECT NAME: BRADFORD
PROJECT NUMBER: IM 091-2(88)

FILE NAME: z19A221quanshts_Bradford
PROJECT LEADER: C. BAKER
DESIGNED BY: A. CHRISTIE
QUANTITY SHEET 1

PLOT DATE: 29-JUNE-2020
DRAWN BY: A. CHRISTIE
CHECKED BY: S. BROWN
SHEET 3 OF 26

STATE OF VERMONT
AGENCY OF TRANSPORTATION

QUANTITY SHEET 2

SUMMARY OF ESTIMATED QUANTITIES											TOTALS		DESCRIPTIONS				DETAILED SUMMARY OF QUANTITIES		
ROADWAY	BRIDGE NO. 58N	BRIDGE NO. 58S	BRIDGE NO. 59N	BRIDGE NO. 59S	BRIDGE NO. 60N	BRIDGE NO. 60S	BRIDGE NO. 61N	BRIDGE NO. 61S	FULL C.E. ITEMS		GRAND TOTAL	FINAL	UNIT	ITEMS	ITEM NUMBER	ROUND	QUANTITIES	UNIT	ITEMS
		120									120		LF	SPEICAL PROVISION (BRIDGE RAILING REPAIR)	900.6XX1				
	1	1	1	1	1	1	1	1			8		LS	SPECIAL PROVISION (MISCELLANEOUS BRIDGE CLEANING)	900.6XX2				
								44			44		LF	SPECIAL PROVISION (JOINT REPLACEMENT)	900.6XX3				

PROJECT NAME: BRADFORD
PROJECT NUMBER: IM 091-2(88)

Hardesty & Hanover

FILE NAME: z19A221quanshts_Bradford
PROJECT LEADER: C. BAKER
DESIGNED BY: A. CHRISTIE
QUANTITY SHEET 2

PLOT DATE: 29-JUNE-2020
DRAWN BY: A. CHRISTIE
CHECKED BY: S. BROWN
SHEET 4 OF 26

BRIDGE MAINTENANCE REPAIR SUMMARY SHEET

BRIDGE INFORMATION							ANTICIPATED BRIDGE REPAIRS					
BRIDGE NO.	TOWN	CURB TO CURB WIDTH (FT)	OUT TO OUT WIDTH (FT)	BRIDGE LENGTH (FT)	DECK AREA (FT^2)	SKEW (AS-BUILT) (DEG)	CURB	FASCIA	BRIDGE JOINTS	SUPERSTRUCTURE	SUBSTRUCTURE	OTHER
58N	BRADFORD	39.3	43.3	221.0	9577	35.1		CLASS II REPAIR OF CONCRETE SUPERSTRUCTURE		SEE NOTES 1., 2., AND 3.	SEE BEAM SEAT REPAIR SHEET	
58S		39.3	43.3	221.0	9577	35.1	ISOLATED AREAS OF CLASS I & II REPAIR OF CONCRETE SUPERSTRUCTURE & REPOINTING GRANITE BRIDGE CURBS			SEE NOTES 1., 2., AND 3.		REPAIR OF BRIDGE RAIL AND POST ON WEST CURB
59N		39.3	43.3	251.0	10877	VARIES	AREAS OF CLASS I REPAIR OF CONCRETE SUPERSTRUCTURE	ONE AREA OF CLASS II REPAIR OF CONCRETE SUPERSTRUCTURE	REPLACE COMPRESSION SEAL EXPANSION JOINT WITH VERMONT BRIDGE EXPANSION JOINT	SEE NOTES 1., 2., AND 3.		REPLACE 8 SCUPPER GRATES ALONG EAST CURB
59S		39.3	43.3	271.0	11743	VARIES	AREAS OF CLASS I & II REPAIR OF CONCRETE SUPERSTRUCTURE	SEVERAL AREAS OF CLASS II REPAIR OF CONCRETE SUPERSTRUCTURE	REPLACE COMPRESSION SEAL EXPANSION JOINT WITH VERMONT BRIDGE EXPANSION JOINT	SEE NOTES 1., 2., AND 3.		
60N		39.3	43.3	136.0	5893	19.0	CLASS I REPAIRS OF CONCRETE SUPERSTRUCTURE ADJACENT TO GRANITE CURB AND CLASS III REPAIRS AT NORTH CURB ENDS		REPLACE COMPRESSION SEAL EXPANSION JOINT WITH VERMONT BRIDGE EXPANSION JOINT	SEE NOTES 1., 2., AND 3.		
60S		39.3	43.3	160.0	6933	21.2	CLASS III REPAIRS OF CONCRETE SUPERSTRUCTURE AT NORTH CURB ENDS		REPLACE COMPRESSION SEAL EXPANSION JOINT WITH VERMONT BRIDGE EXPANSION JOINT	SEE NOTES 1., 2., AND 3.		
61N		39.3	43.3	150.0	6500	0.0	ISOLATED AREA OF CLASS I REPAIR OF CONCRETE SUPERSTRUCTURE & REPOINTING GRANITE BRIDGE CURBS			SEE NOTES 1., 2., AND 3.		
61S		39.3	43.3	122.0	5287	16.0		CLASS II REPAIRS OF CONCRETE SUPERSTRUCTURE AT EXPANSION JOINT	SEE JOINT REPLACEMENT DETAIL SHEET	SEE NOTES 1., 2., AND 3.		

NOTE:

1. THE EXISTING PAVEMENT AND MEMBRANE SHALL BE REMOVED AND REPLACED WITH NEW MEMBRANE AND PAVEMENT ON ALL BRIDGES
2. LIMITED DECK REPAIRS ARE ANTICIPATED ON ALL BRIDGES. DECK REPAIRS SHALL BE ASSESSED JOINTLY BY THE RESIDENT ENGINEER AND CONTRACTOR FOLLOWING THE REMOVAL OF EXISTING PAVEMENT AND MEMBRANE.
3. WATER REPELLENT, SILANE SHALL BE APPLIED ON THE CONCRETE CURBS AND FASCIAS ON ALL BRIDGES. SEE THE WATER REPELLENT, SILANE DETAIL.
4. EXISTING ASPHALTIC PLUG EXPANSION JOINTS SHALL BE REMOVED ON ALL BRIDGES AND REPLACED WITH NEW ASPHALTIC PLUG JOINTS. COST OF REMOVAL SHALL BE INCIDENTAL TO ITEM 516.10, SEE STRUCTURES DETAIL SD-516.10
5. THIS SHEET DEPICTS THE GENERAL INFORMATION AND ANTICIPATED WORK AT EACH BRIDGE. IT IS NOT INTENDED TO BE A COMPLETE PRESENTATION OF ALL THE WORK REQUIRED AT EACH BRIDGE. THE CONTRACTOR SHALL COMPLETE ALL WORK IN ACCORDANCE WITH THESE PLANS, THE SPECIFICATIONS, THE SPECIAL PROVISIONS, AND AS -DIRECTED BY THE ENGINEER.

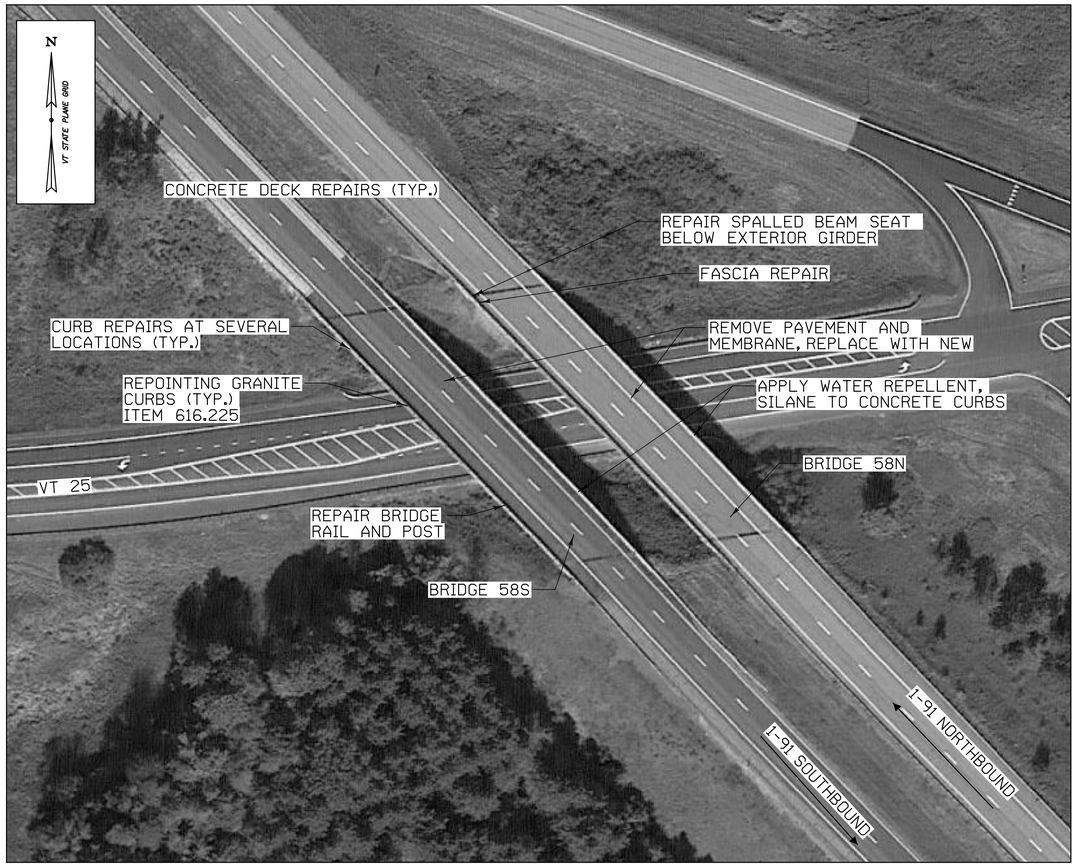

REPAIR LAYOUT - BRIDGE NO. 58N AND BRIDGE NO. 58S
NOT TO SCALE

REPAIR LAYOUT - BRIDGE NO. 59N AND BRIDGE NO. 59S
NOT TO SCALE

NOTE:
SEE BRIDGE MAINTENANCE REPAIR SUMMARY SHEET NOTE 5.

Hardesty & Hanover

PROJECT NAME: BRADFORD	
PROJECT NUMBER: IM 091-2(88)	
FILE NAME: z19A221layout_Bradford	PLOT DATE: 29-JUNE-2020
PROJECT LEADER: C. BAKER	DRAWN BY: A. CHRISTIE
DESIGNED BY: A. CHRISTIE	CHECKED BY: S. BROWN
REPAIR LAYOUT SHEET 1	SHEET 6 OF 26

REPAIR LAYOUT - BRIDGE NO. 60N AND BRIDGE NO 60S
NOT TO SCALE

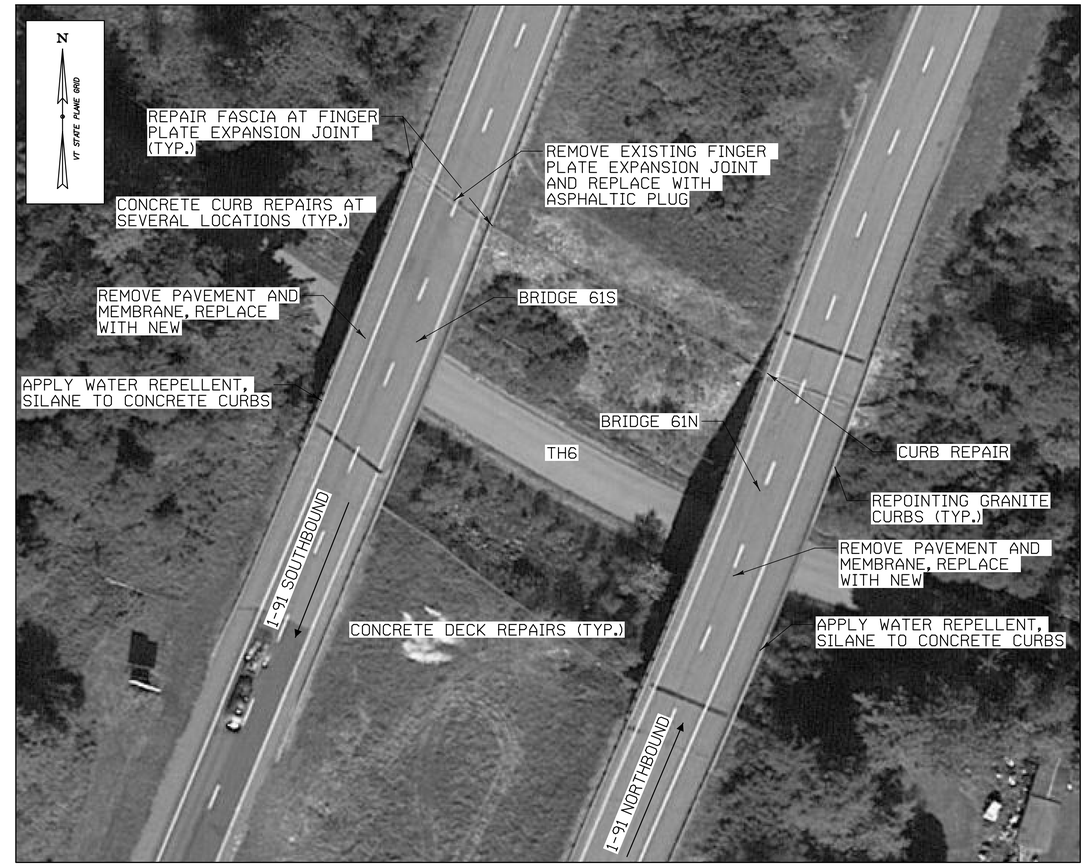

REPAIR LAYOUT - BRIDGE NO. 61N AND BRIDGE NO 61S
NOT TO SCALE

NOTE:
SEE BRIDGE MAINTENANCE REPAIR SUMMARY SHEET NOTE 5.

Hardesty & Hanover

PROJECT NAME: BRADFORD	
PROJECT NUMBER: IM 091-2(88)	
FILE NAME: z19A221layout_Bradford	PLOT DATE: 29-JUNE-2020
PROJECT LEADER: C. BAKER	DRAWN BY: A. CHRISTIE
DESIGNED BY: A. CHRISTIE	CHECKED BY: S. BROWN
REPAIR LAYOUT SHEET 2	SHEET 7 OF 26

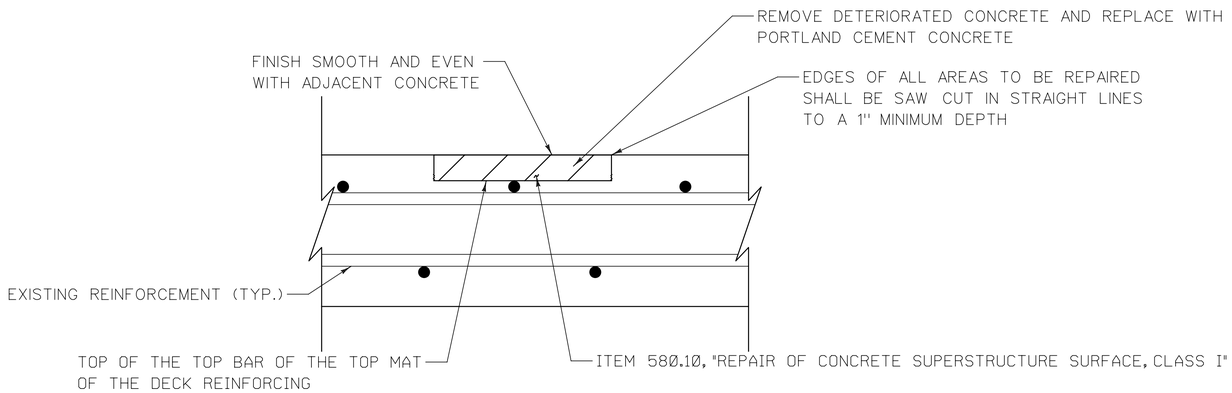

CLASS I DECK REPAIR DETAIL

NOT TO SCALE

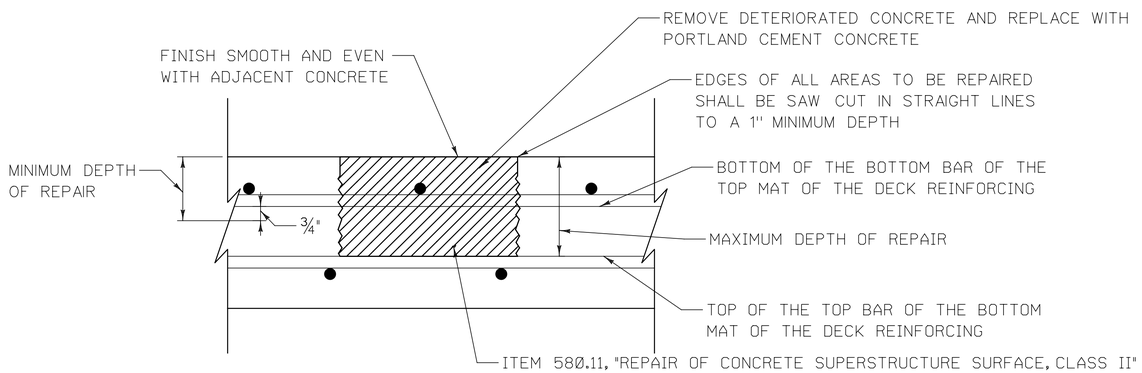

CLASS II DECK REPAIR DETAIL

NOT TO SCALE

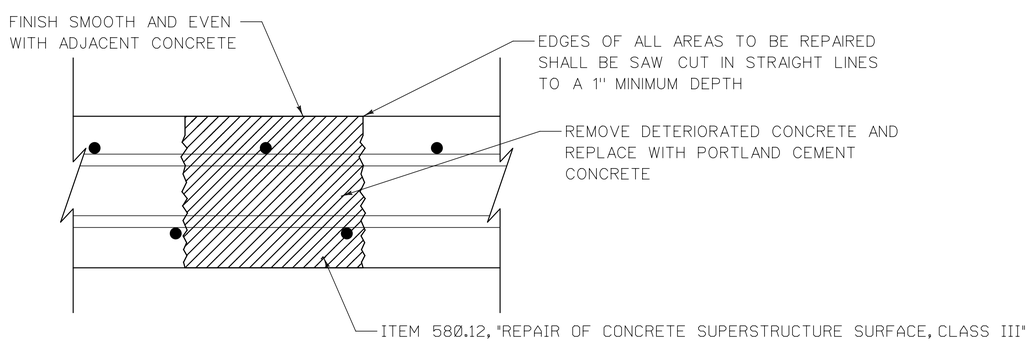

CLASS III DECK REPAIR DETAIL

NOT TO SCALE

SUPERSTRUCTURE SURFACE REPAIR NOTES:

1. AFTER THE EXISTING BARRIER MEMBRANE IS REMOVED, ANY AREAS ON THE CONCRETE BRIDGE DECK (AND AT- GRADE APPROACH SLABS IF APPLICABLE) THAT ARE FOUND TO BE UNSOUND SHALL BE BROUGHT TO THE ATTENTION OF THE ENGINEER. THE CONTRACTOR SHALL PROVIDE SAFE ACCESS FOR DELINEATION AND INSPECTION OF THE DECK REPAIR AREAS TO THE ENGINEER. THE ENGINEER SHALL MAKE A DETERMINATION AS TO HOW TO REPAIR THE DETERIORATED PORTION OF THE CONCRETE BRIDGE DECK (AND AT- GRADE APPROACH SLABS IF APPLICABLE) AND THE LIMITS OF THE REPAIR. THE REPAIRS SHALL BE PAID FOR UNDER ITEM 580.10, "REPAIR OF CONCRETE SUPERSTRUCTURE SURFACE, CLASS I", ITEM 580.11, "REPAIR OF CONCRETE SUPERSTRUCTURE SURFACE, CLASS II", OR ITEM 580.12, "REPAIR OF CONCRETE SUPERSTRUCTURE SURFACE, CLASS III". QUANTITIES FOR ITEMS 580.10, 580.11, AND 580.12 AS SHOWN ON THE QUANTITY SUMMARY SHEETS ARE ESTIMATED.

2. CONCRETE SPALLS ON THE CURBS AND FASCIAS WHICH ARE LESS THAN 1.0" DEEP AT THE DEEPEST POINT AND HAVE NO EXPOSED REINFORCING SHALL NOT BE REPAIRED. CONCRETE SPALLS GREATER THAN 1.0" DEEP OR THAT HAVE EXPOSED REINFORCING SHALL BE REPAIRED UNDER THE APPROPRIATE CONCRETE SUPERSTRUCTURE REPAIR ITEM.

3. ALL CONCRETE SPALLS ON THE TOP OF THE BRIDGE DECKS WILL BE REPAIRED USING THE APPROPRIATE CONCRETE SUPERSTRUCTURE REPAIR ITEMS. FOLLOWING ALL CONCRETE SUPERSTRUCTURE REPAIRS, THE SURFACES OF THE BRIDGE DECKS SHALL BE PREPARED FOR THE APPLICATION OF SHEET MEMBRANE WATERPROOFING. PREPARATION OF THE BRIDGE DECKS WILL BE PAID FOR UNDER ITEM 580.16, "SURFACE PREPARATION FOR MEMBRANE".

4. REPAIR MATERIAL FOR CONCRETE SUPERSTRUCTURE REPAIRS SHALL MEET THE REQUIREMENTS OF ITEM 541.21 "CONCRETE CLASS AA."

5. ALL EXISTING REINFORCING BARS ENCOUNTERED WITHIN THE LIMITS OF ITEM 580.11 & ITEM 580.12 THAT ARE BROKEN OR THAT ARE CORRODED 25% OR MORE SHALL BE REPLACED WITH ITEM 507.11, "REINFORCING STEEL, LEVEL I". NEW REINFORCING STEEL MAY BE DRILLED AND GROUTED INTO PLACE IF AUTHORIZED BY THE ENGINEER. PAYMENT WILL MADE UNDER ITEM 507.16, "DRILLING AND GROUTING DOWELS".

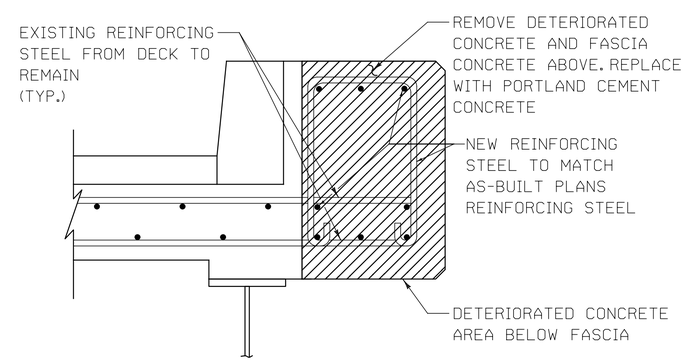

CLASS III FASCIA REPAIR DETAIL

NOT TO SCALE

Hardesty & Hanover

PROJECT NAME: BRADFORD	
PROJECT NUMBER: IM 091-2(88)	
FILE NAME: z19A221details_Bradford	PLOT DATE: 29-JUNE-2020
PROJECT LEADER: C. BAKER	DRAWN BY: A. CHRISTIE
DESIGNED BY: A. CHRISTIE	CHECKED BY: S. BROWN
SUPERSTRUCTURE REPAIR DETAILS	SHEET 8 OF 26

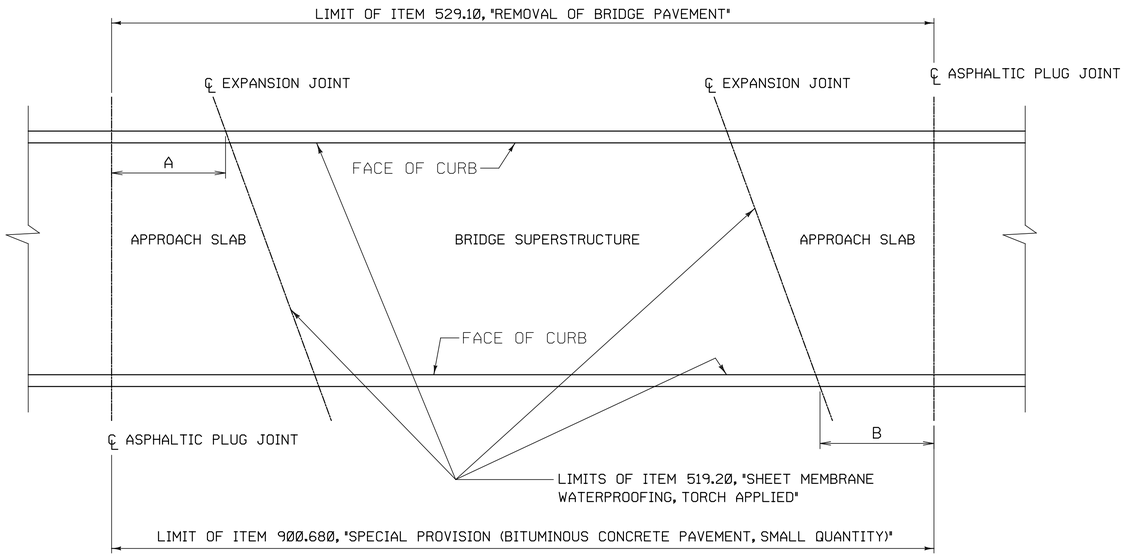

PAVEMENT AND MEMBRANE DETAIL
NOT TO SCALE

BRIDGE APPROACH SLAB LENGTH TABLE

BRIDGE NO.	A	B
BRIDGE 58N	20'	20'
BRIDGE 58S	20'	20'
BRIDGE 59N	20'	20'
BRIDGE 59S	20'	20'
BRIDGE 60N	20'	20'
BRIDGE 60S	20'	20'
BRIDGE 61N	20'	20'
BRIDGE 61S	20'	20'

NOTES:

1. THE KEY PLAN IS SHOWN FOR GRAPHICAL PURPOSES ONLY AND IS NOT AN EXACT REPRESENTATION OF ALL BRIDGES WITHIN THE PROJECT. SEE THE REFERENCE SHEETS FOR THE LIMITS OF INDIVIDUAL BRIDGE COMPONENTS.
2. DIMENSIONS 'A' AND 'B' ARE SHOWN TO INDICATE THAT THE LIMITS OF WORK FOR ITEM 529.10 AND ITEM 900.680 ARE TO EXTEND TO THE ASPHALTIC PLUG JOINTS AT THE ENDS OF THE APPROACH SLABS.

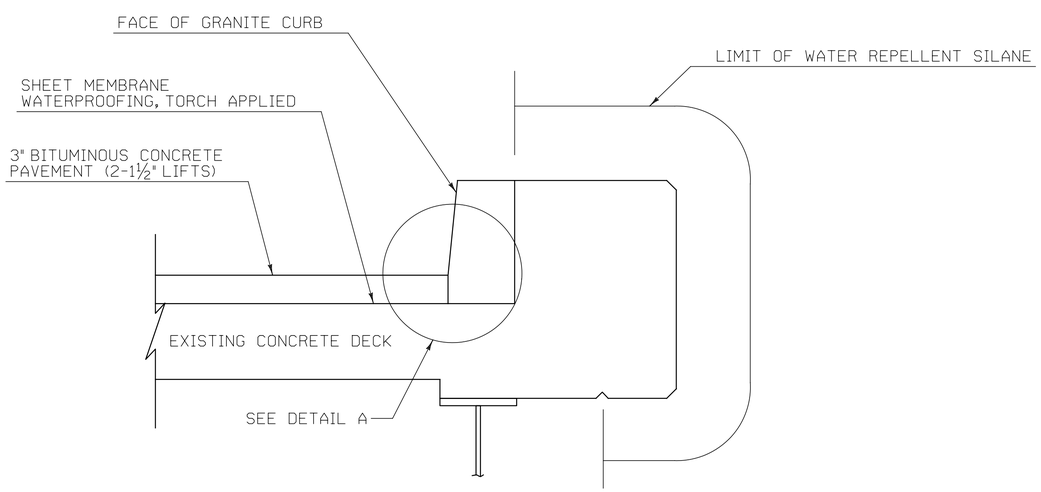

DETAILS AT BRIDGE CURBS
NOT TO SCALE

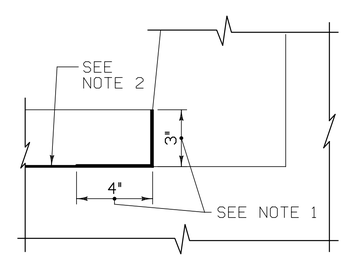

DETAIL A

DETAIL A NOTES:

1. INDICATES AREA ALONG DECK AND UP FACE OF CURB FOR PLACEMENT OF ONE ADDITIONAL COAT OF SHEET MEMBRANE WATERPROOFING.
2. SHEET MEMBRANE WATERPROOFING SHALL EXTEND HORIZONTALLY TO THE FACE OF CURB.

PROJECT NAME: BRADFORD	
PROJECT NUMBER: IM 091-2(88)	
FILE NAME: z19A221details_Bradford	PLOT DATE: 29-JUNE-2020
PROJECT LEADER: C. BAKER	DRAWN BY: A. CHRISTIE
DESIGNED BY: A. CHRISTIE	CHECKED BY: S. BROWN
PAVEMENT AND MEMBRANE PLAN	SHEET 9 OF 26

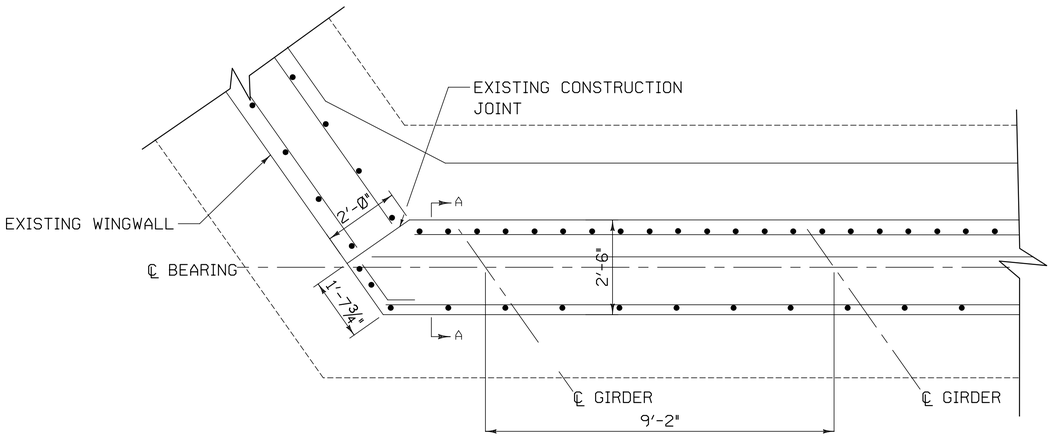

BRIDGE NO. 58N - NORTH ABUTMENT BEAM SEAT EXISTING PLAN

NOT TO SCALE

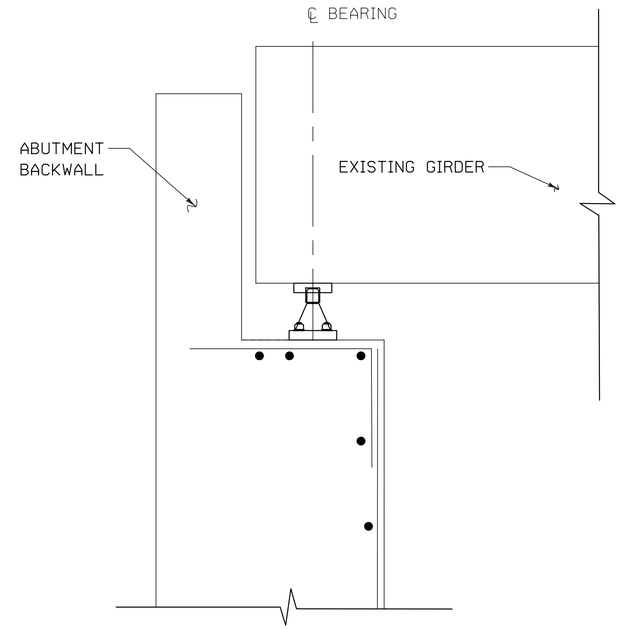

BRIDGE NO. 58N - NORTH ABUTMENT SECTION A-A

NOT TO SCALE

BEAM SEAT REPAIR NOTES:

1. THE EXTERIOR GIRDER SHALL BE TEMPORARILY SUPPORTED DURING THE BEAM SEAT REPAIR, SEE THE PROJECT SPECIAL PROVISIONS. THE COST TO TEMPORARILY SUPPORT THE GIRDER WILL BE PAID FOR UNDER ITEM 502.10, "SHORING SUPERSTRUCTURE".

2. THE REMOVAL LIMITS SHOWN ARE ESTIMATED AND ARE TO BE VERIFIED OR ADJUSTED BY THE ENGINEER PRIOR TO COMMENCING WORK. ACCESS SHALL BE PROVIDED BY THE CONTRACTOR FOR THE ENGINEER TO MAKE THIS DETERMINATION PRIOR TO THE START OF WORK. ONCE REMOVAL IS COMPLETE, ACCESS SHALL AGAIN BE PROVIDED FOR THE ENGINEER TO DETERMINE IF ADDITIONAL REMOVAL IS REQUIRED.

3. THE COST FOR REMOVAL AND DISPOSAL OF UNSOUND CONCRETE AND REPLACEMENT WITH NEW CONCRETE SHALL BE PAID UNDER ITEM 580.15. "REPAIR OF CONCRETE SUBSTRUCTURE SURFACE, CLASS III".

4. REPAIR MATERIAL FOR CONCRETE SUBSTRUCTURE REPAIRS SHALL MEET THE REQUIREMENTS OF ITEM 541.21 "CONCRETE CLASS AA".

5. ALL EXISTING REINFORCING BARS ENCOUNTERED WITHIN THE LIMITS OF ITEM 580.15 THAT ARE BROKEN OR THAT ARE CORRODED 25% OR MORE SHALL BE REPLACED WITH ITEM 507.11, REINFORCING STEEL, LEVEL I". NEW REINFORCING STEEL MAY BE DRILLED AND GROUTED INTO PLACE IF AUTHORIZED BY THE ENGINEER AND WILL BE PAID FOR UNDER ITEM 507.16, "DRILLING AND GROUTING DOWELS".

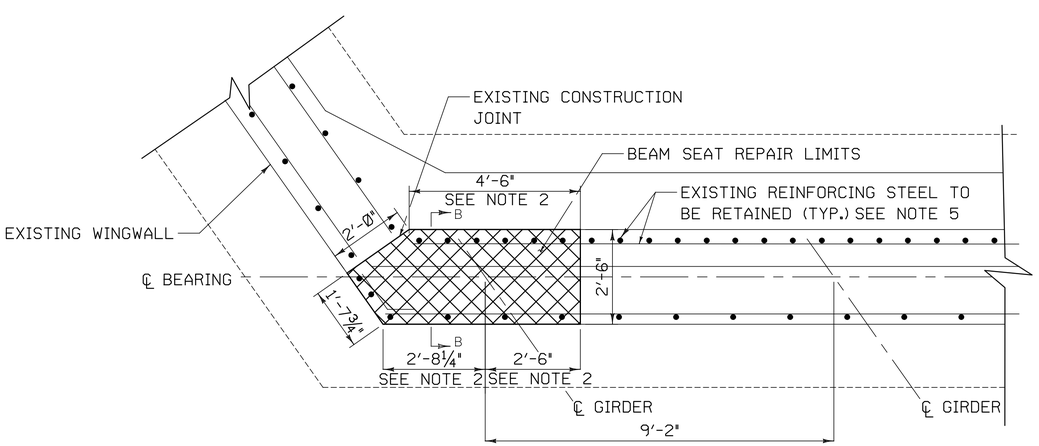

BRIDGE NO. 58N - NORTH ABUTMENT BEAM SEAT REPAIR PLAN

NOT TO SCALE

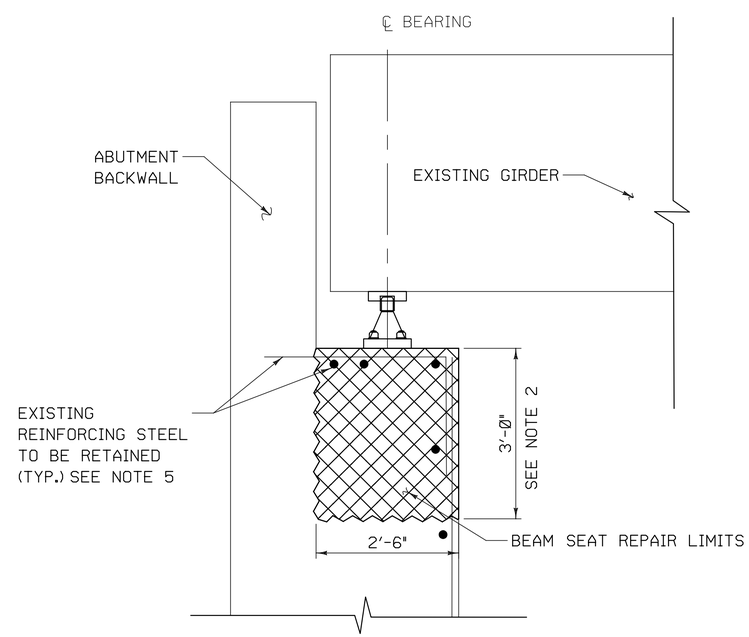

BRIDGE NO. 58N - NORTH ABUTMENT SECTION B-B

NOT TO SCALE

PROJECT NAME: BRADFORD	
PROJECT NUMBER: IM 091-2(88)	
FILE NAME: z19A221details_Bradford	PLOT DATE: 29-JUNE-2020
PROJECT LEADER: C. BAKER	DRAWN BY: A. CHRISTIE
DESIGNED BY: A. CHRISTIE	CHECKED BY: S. BROWN
BEAM SEAT REPAIRS	SHEET 10 OF 26

Hardesty & Hanover

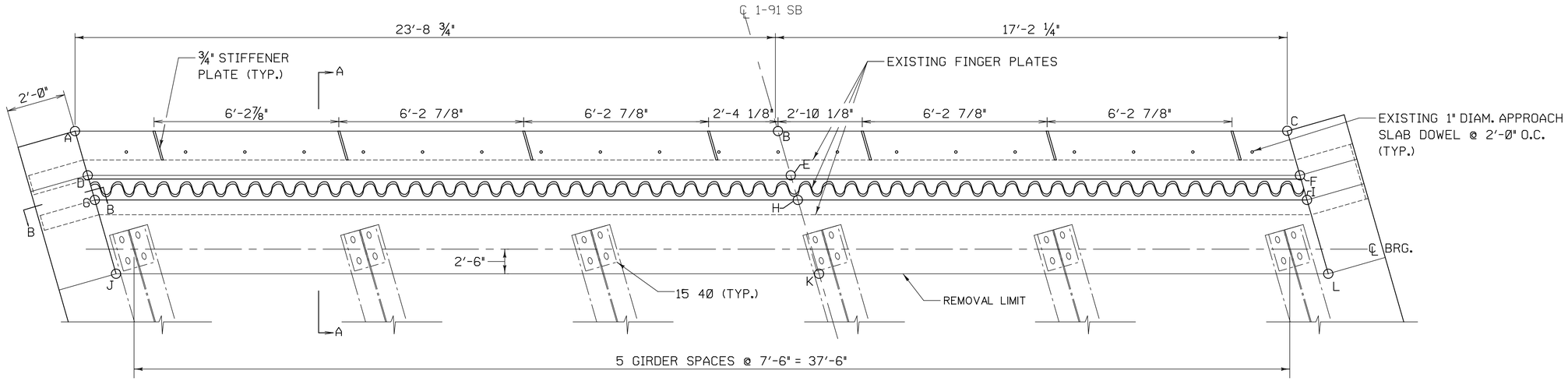

BRIDGE NO. 61S - EXISTING FINGER PLATE EXPANSION JOINT
NOT TO SCALE

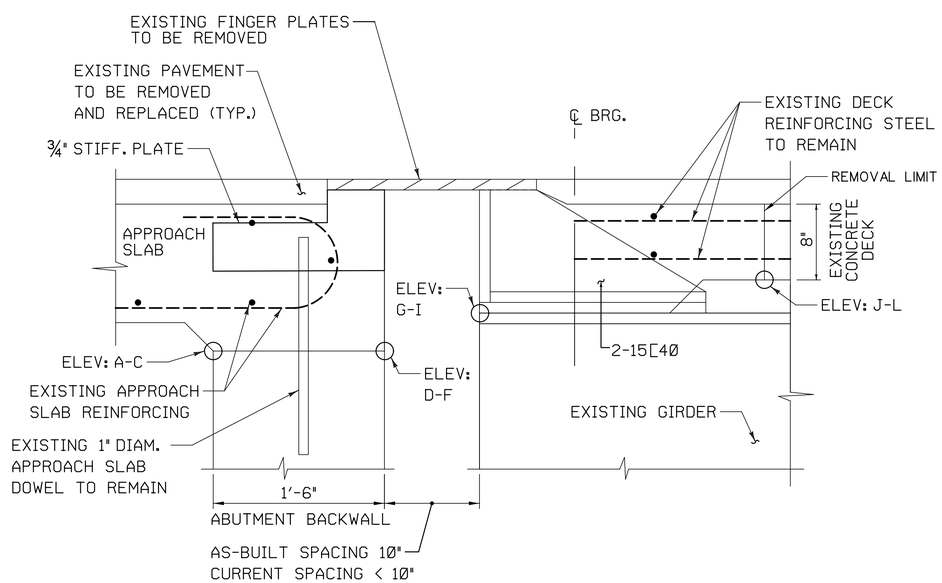

SECTION A-A
NOT TO SCALE

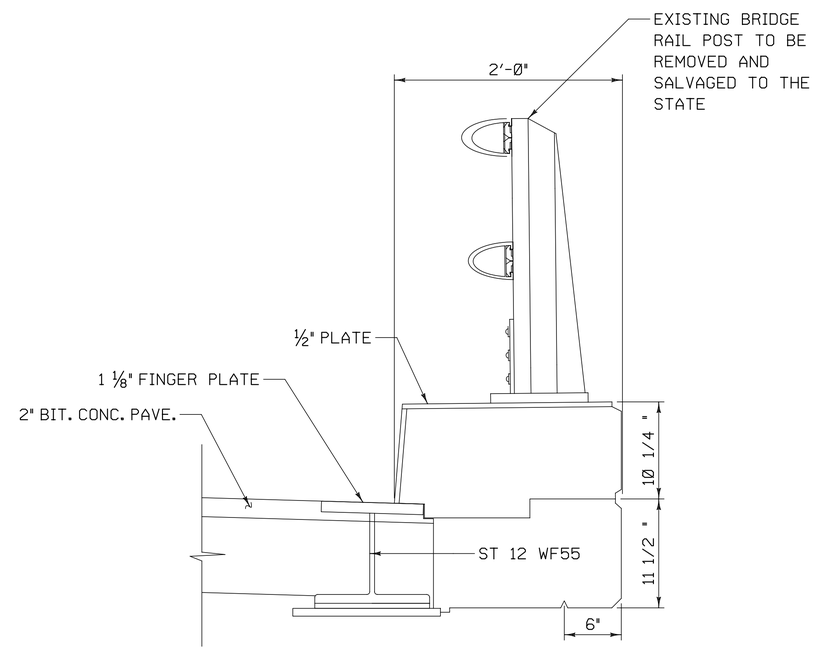

SECTION B-B
NOT TO SCALE

EXISTING BRIDGE ELEVATIONS

POINT	ELEVATION
A	605.28
B	605.90
C	605.39
D	605.27
E	605.89
F	605.38
G	605.79
H	606.41
I	605.90
J	605.96
K	606.58
L	606.07

NOTE:

SEE JOINT REPLACEMENT NOTES ON NEXT SHEET.

Hardesty & Hanover

PROJECT NAME: BRADFORD
PROJECT NUMBER: IM 091-2(88)

FILE NAME: z19A221details_Bradford
PROJECT LEADER: C. BAKER
DESIGNED BY: A. CHRISTIE
JOINT REPLACEMENT DETAIL SHEET 1

PLOT DATE: 29-JUNE-2020
DRAWN BY: A. CHRISTIE
CHECKED BY:
SHEET 11 OF 26

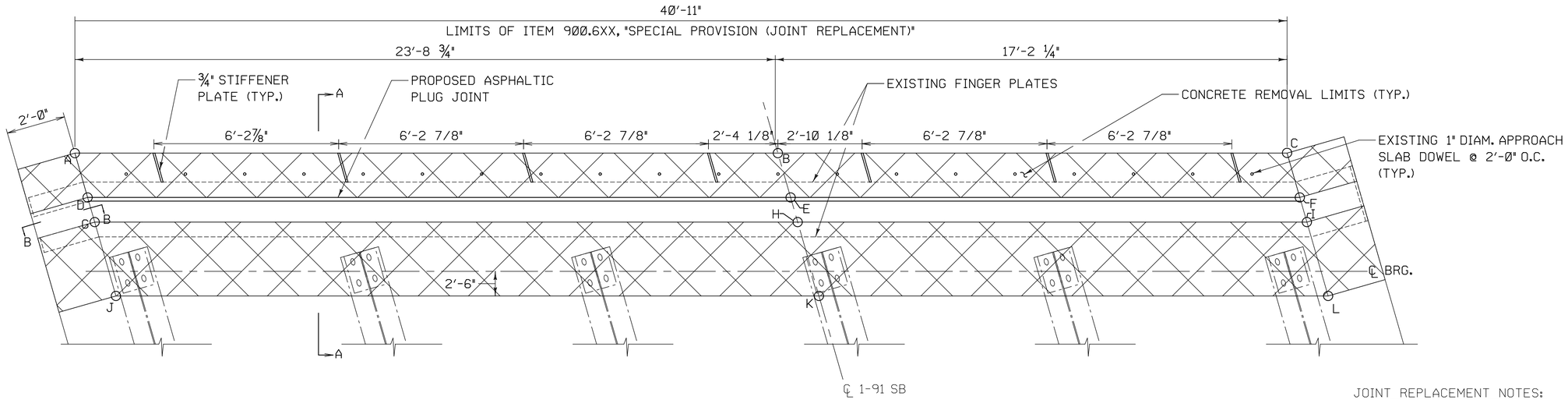

BRIDGE NO. 61S - PROPOSED ASPHALTIC PLUG JOINT

NOT TO SCALE

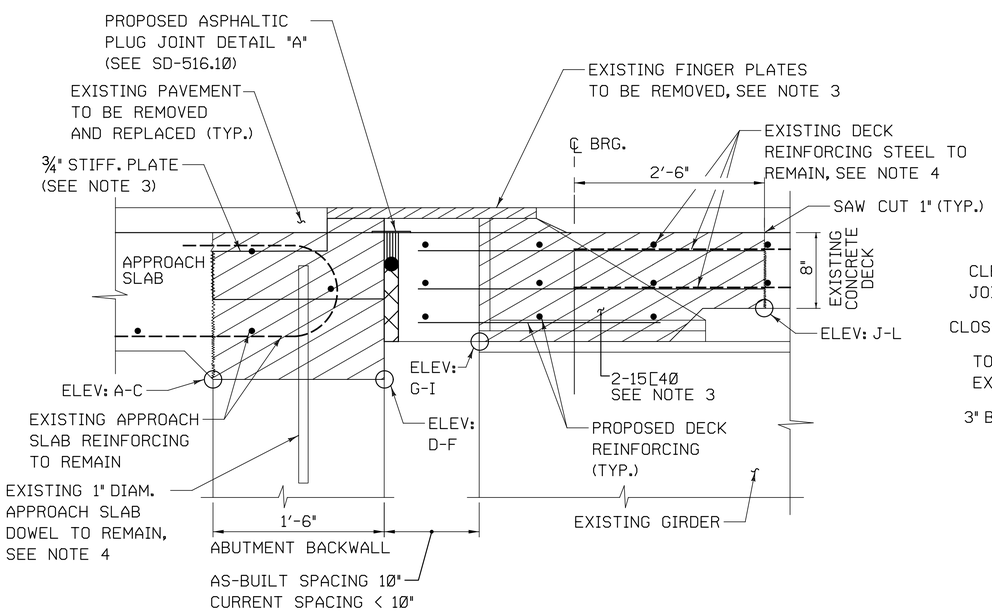

SECTION A-A

NOT TO SCALE

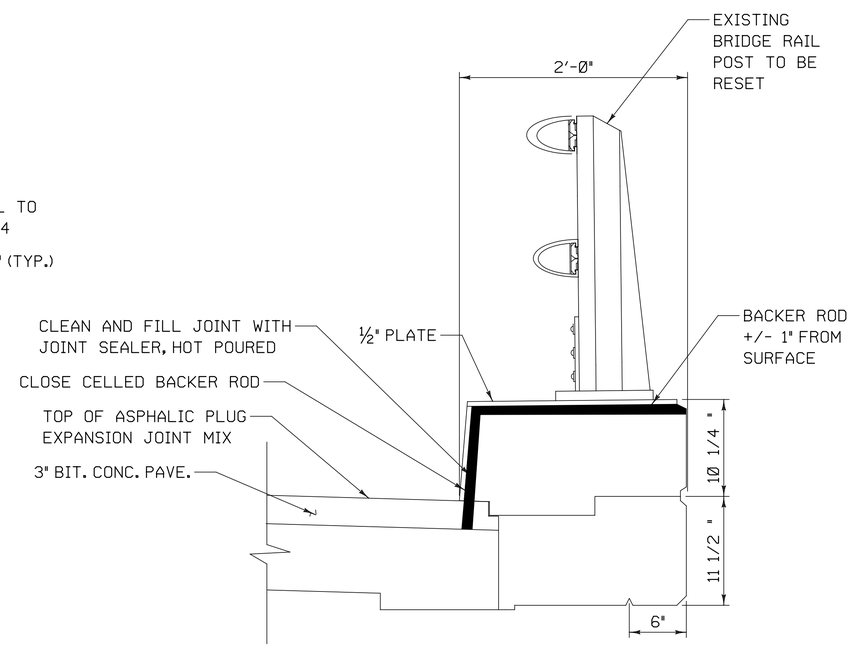

SECTION B-B

NOT TO SCALE

JOINT REPLACEMENT NOTES:

1. DIMENSIONS OF EXISTING FEATURES AND ELEVATIONS WERE OBTAINED FROM THE RECORD PLANS (1966) AND SHOP DRAWINGS (1972). THE EXISTING INFORMATION SHOWN ON THE PLANS DOES NOT NECESSARILY REPRESENT AS-BUILT, OR CURRENT CONDITIONS. THE CONTRACTOR SHALL FIELD VERIFY ALL NECESSARY CONDITIONS.

2. REMOVAL LIMITS FOR THE EXISTING FINGER PLATE EXPANSION JOINT SHALL NOT CONFLICT WITH THE LOCATIONS OF THE STIFFENER PLATES IN EACH PHASE OF CONSTRUCTION.

3. THE EXISTING FINGER PLATE EXPANSION JOINT INCLUDING ALL HARDWARE AND FASTENERS SHALL BE REMOVED FROM THE APPROACH SLAB, BRIDGE DECK, AND CURBS.

4. EXISTING REINFORCING STEEL BARS ENCOUNTERED WITHIN THE REMOVAL LIMITS THAT ARE BROKEN OR THAT ARE CORRODED 25% OR MORE SHALL BE REPLACED WITH ITEM 507.11, "REINFORCING STEEL, LEVEL I". NEW REINFORCING STEEL MAY BE DRILLED AND GROUTED INTO PLACE IF AUTHORIZED BY THE ENGINEER. PAYMENT WILL BE MADE UNDER ITEM 507.16, "DRILLING AND GROUTING DOWELS".

5. THE REMOVAL OF THE EXISTING FINGER PLATE JOINT AND THE REPLACEMENT WITH THE ASPHALTIC PLUG JOINT SHALL BE ACCOMPLISHED IN PHASES IN ACCORDANCE WITH THE APPROVED TRAFFIC CONTROL PLAN.

Hardesty & Hanover

PROJECT NAME: BRADFORD	
PROJECT NUMBER: IM 091-2(88)	
FILE NAME: z19A221details_Bradford	PLOT DATE: 29-JUNE-2020
PROJECT LEADER: C. BAKER	DRAWN BY: A. CHRISTIE
DESIGNED BY: A. CHRISTIE	CHECKED BY:
JOINT REPLACEMENT DETAIL SHEET 2	SHEET 12 OF 26

BRIDGE RAIL REPAIR NOTES:

1. THE APPROXIMATE LENGTH OF DAMAGED EXISTING ALUMINUM BRIDGE RAILING TO BE REPLACED IS SHOWN. PRIOR TO START OF WORK, THE CONTRACTOR SHALL PROVIDE ACCESS FOR THE ENGINEER TO VERIFY OR ADJUST THE LENGTH OF REMOVAL AND REPLACEMENT REQUIRED. REMOVAL AND REPLACEMENT OF RAILING INCLUDING ALL HARDWARE SHALL BE PAID UNDER ITEM 900.6XX, "SPECIAL PROVISION (REMOVE AND REPLACE EXISTING BRIDGE RAILING)". REMOVAL AND REPLACEMENT OF BRIDGE RAIL POST INCLUDING BASE PLATE, ANCHOR PLATE, AND ANCHOR BOLTS SHALL BE PAID UNDER ITEM 900.6XX, "SPECIAL PROVISION (BRIDGE RAILING REPAIR)".

2. THE APPROXIMATE LENGTH OF DAMAGED CURB IS SHOWN. PRIOR TO START OF WORK, THE CONTRACTOR SHALL PROVIDE ACCESS TO THE ENGINEER TO VERIFY OR ADJUST THE LENGTH OF REMOVAL AND REPLACEMENT REQUIRED. REMOVAL AND REPLACEMENT OF CURB AND DECK TO BE PAID FOR UNDER ITEM 580.11 OR ITEM 580.12 AS NEEDED.

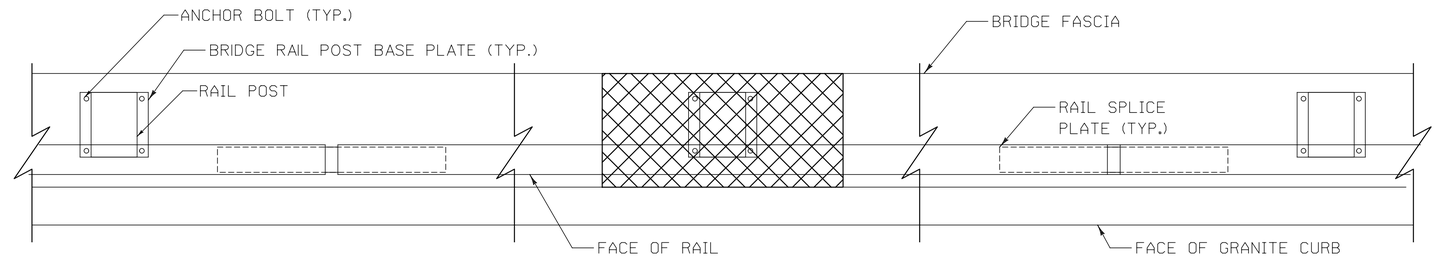

PLAN VIEW
SCALE: 1" = 1'

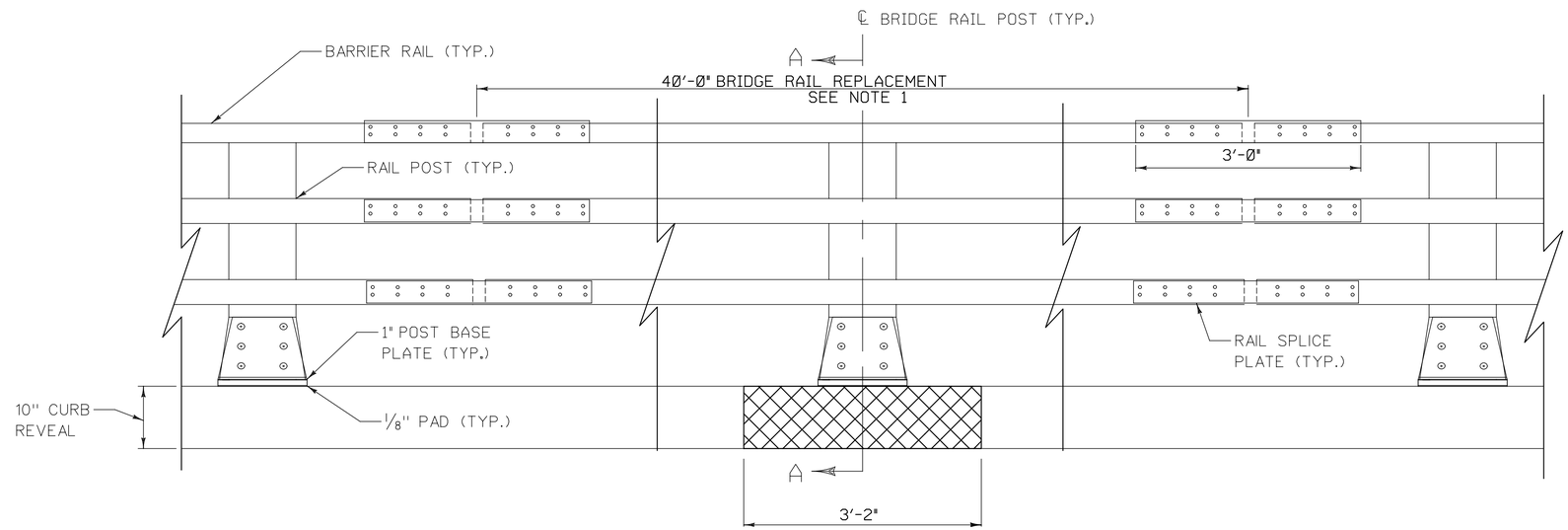

ELEVATION VIEW
SCALE: 1" = 1'

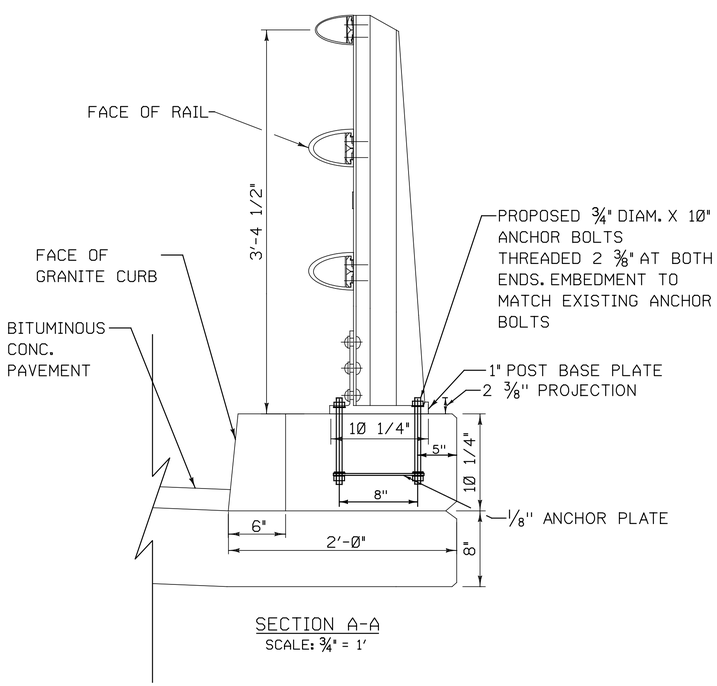

SECTION A-A
SCALE: 3/4" = 1'

PROJECT NAME: BRADFORD	
PROJECT NUMBER: IM 091-2(88)	
FILE NAME: z19A221details_Bradford	PLOT DATE: 29-JUNE-2020
PROJECT LEADER: C. BAKER	DRAWN BY: A. CHRISTIE
DESIGNED BY: A. CHRISTIE	CHECKED BY: S. BROWN
RAIL REPAIR DETAILS	SHEET 13 OF 26

Hardesty & Hanover

WORKZONE TRAFFIC CONTROL

TOWN	BRIDGE NO / CARRYING	2019 BRIDGE AADT	CURB-CURB WIDTH (FT)	BRIDGE LENGTH (FT)	INTERCHANGE	TRAFFIC CONTROL SHEETS
BRADFORD	58 NB OVER VT 25	3036	39	225	EXIT 16	T-11, T-12 SHORT-TERM LANE CLOSURE DRUMS T-11, T-13 LONG-TERM LANE CLOSURE TEMPORARY BARRIER T-23 RAMP ENTRANCE/EXIT LANE SHIFT SHOULDER CLOSURE FOR SUBSTRUCTURE WORK
	58 SB OVER VT 25	3058	39	225		T-11, T-12 SHORT-TERM LANE CLOSURE DRUMS T-11, T-13 LONG-TERM LANE CLOSURE TEMPORARY BARRIER T-23 RAMP ENTRANCE/EXIT LANE SHIFT
	59 NB OVER WAITS RIVER	3036	39.5	251	NORTH OF EXIT 16	T-11, T-12 SHORT-TERM LANE CLOSURE DRUMS T-11, T-13 LONG-TERM LANE CLOSURE TEMPORARY BARRIER
	59 SB OVER WAITS RIVER	3058	39.5	271		T-11, T-12 SHORT-TERM LANE CLOSURE DRUMS T-11, T-13 LONG-TERM LANE CLOSURE TEMPORARY BARRIER
	60 NB OVER VT 25B	3036	39.5	136	NORTH OF EXIT 16	T-11, T-12 SHORT-TERM LANE CLOSURE DRUMS T-11, T-13 LONG-TERM LANE CLOSURE TEMPORARY BARRIER
	60 SB OVER VT 25B	3058	39.6	160		T-11, T-12 SHORT-TERM LANE CLOSURE DRUMS T-11, T-13 LONG-TERM LANE CLOSURE TEMPORARY BARRIER
	61 NB OVER TH 6	3036	39	150	N/A	T-11, T-12 SHORT-TERM LANE CLOSURE DRUMS T-11, T-13 LONG-TERM LANE CLOSURE TEMPORARY BARRIER
	61 SB OVER TH 6	3058	39	122		T-11, T-12 SHORT-TERM LANE CLOSURE DRUMS T-11, T-13 LONG-TERM LANE CLOSURE TEMPORARY BARRIER

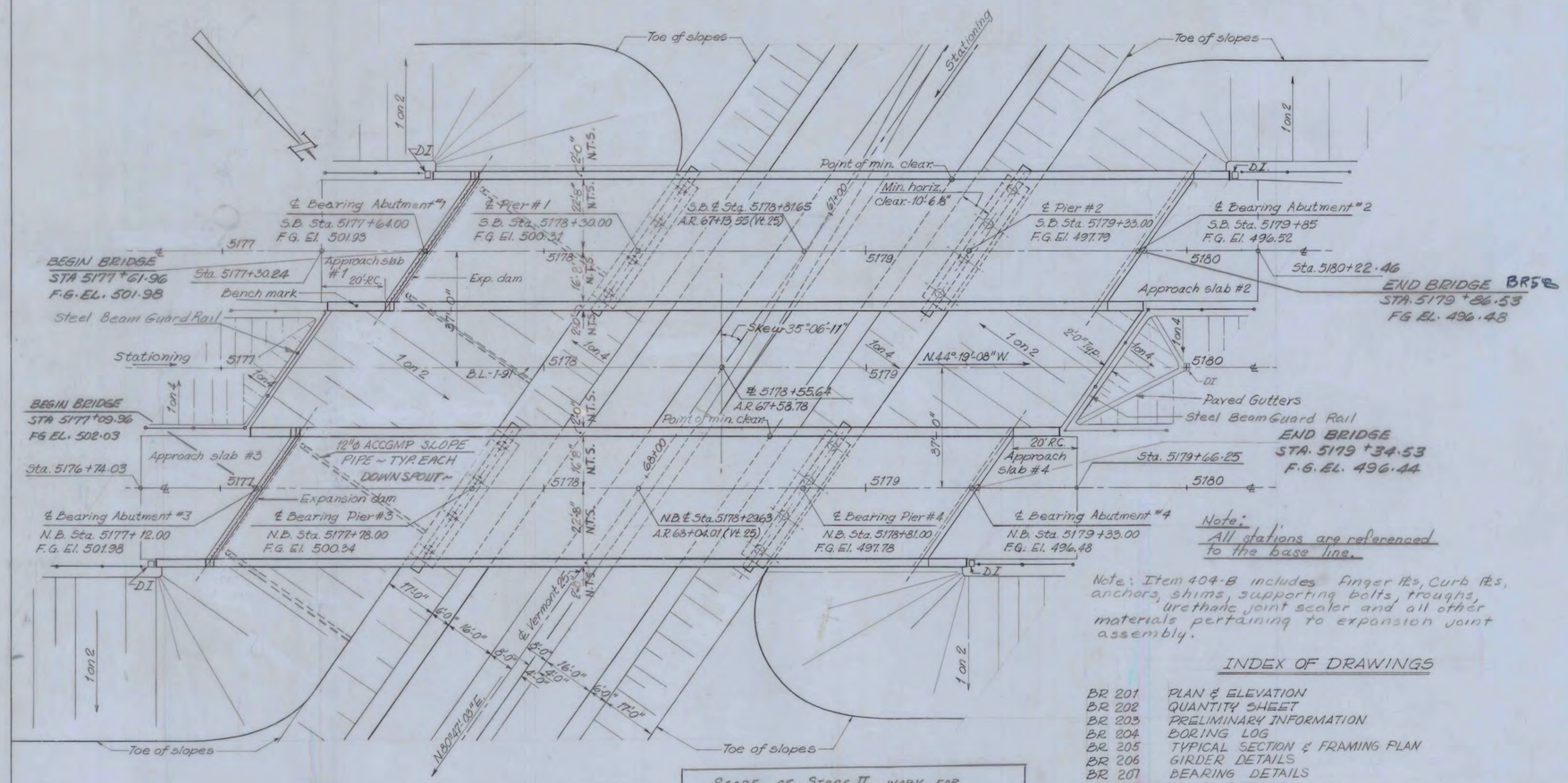

PLAN
Scale: 1" = 20'-0"

Note: Item 404-B includes Finger Rts, Curb Rts, anchors, shims, supporting bolts, troughs, urethane joint sealer and all other materials pertaining to expansion joint assembly.

SCOPE OF STAGE II WORK FOR THIS STRUCTURE ON PROJECT BRADFORD-RYEGATE I 91-2(26): TOP COURSE BITUMINOUS PAVEMENT AND JOINT SEALER, APPROACH SLABS 2 & 4. 6-20-73 R. GENDRON.

INDEX OF DRAWINGS

BR 201	PLAN & ELEVATION
BR 202	QUANTITY SHEET
BR 203	PRELIMINARY INFORMATION
BR 204	BORING LOG
BR 205	TYPICAL SECTION & FRAMING PLAN
BR 206	GIRDER DETAILS
BR 207	BEARING DETAILS
BR 208	JOINT DETAILS
BR 209	ABUTMENT NO. 1 & WINGWALL
BR 210	ABUTMENT NO. 2 & WINGWALL
BR 211	ABUTMENTS NO. 1 & 2 FOOTING DETAILS & TYP. SECTION
BR 212	ABUTMENT NO. 3 & WING WALL
BR 213	ABUTMENT NO. 4 & WINGWALL
BR 214	ABUTMENTS NO. 3 & 4 FOOTING DETAILS
BR 215	ABUTMENT DETAILS
BR 216	PIERS NO. 1 & 3 - DETAILS
BR 217	PIERS NO. 2 & 4 - DETAILS
BR 218	APPROACH SLAB NO. 1
BR 219	APPROACH SLAB NO. 2
BR 220	APPROACH SLAB NO. 3
BR 221	APPROACH SLAB NO. 4
BR 222	REINFORCING STEEL DETAILS
BR 223	REINFORCING STEEL DETAILS
BR 224	REINFORCING STEEL DETAILS

STANDARD DRAWINGS

SCB D6	G7	CURB DETAILS & CONSTRUCTION JOINT DETAILS	(A,B,C) 5/23/69 R
SCB D4	G7	DECK REINFORCING LAYOUT @ ABUTMENT	12/17/68 R
SCB D2	G7	BEAM HAUNCH	C 1/24/68
SCB D1	G7	BENCH MARK, BRIDGE MARKER DET'LS., & GEN'L. NOTES	1/24/68
SB	R2	65 STEEL RAILING DETAILS	11/8/66 A
SB	R1	64 SHEETS 1 & 2 - ALUMINUM RAILING DETAILS	12/16/68 R
SB	P1	66 CAST-IN-PLACE CONCRETE PILING	11/8/66 11/8/66 R

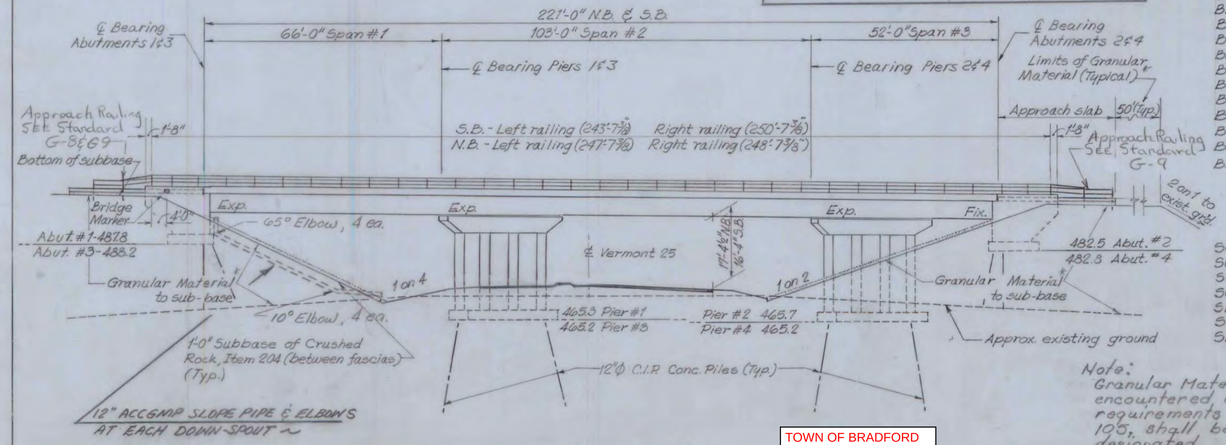

ELEVATION
scale: 1" = 20'-0"

Note:
Granular Material obtained from excavation encountered on the project meeting the requirements of Granular Borrow, Item 105, shall be used within the limits designated.

TOWN OF BRADFORD
IM 091-2(88)
SHEET 15 OF 26
BRIDGE 58N & 58S
FOR REFERENCE ONLY

Revised drainspout & drainage system @ exp. dam. Added Item 404-B note. Included pier columns to be treated with Item 440.
~ WHD-VAR - 12/67 ~

Revised for Stage II Items 6-13-73 R.P.G.

Added Approach railing G. Rogers 6-27-73

G. Rogers Aug 1969 Revised to brush curb; changed roadway width and curb width; changed Std. Dwg. dates; added required number of pile loading tests.

GENERAL NOTES

SPECIFICATIONS

All materials & construction shall conform to the state of Vermont, Department of Highways, Standard Specifications for Highway & Bridge Construction dated April, 1964, & the AASHO Standard Specifications dated 1969.

LIVE LOAD

Structure designed for HS 20-44 loading modified for National System of Interstate Highways applied in accordance with the provisions of the AASHO Standard Specifications, Article 1.2.8.

CONCRETE

All exposed edges of concrete shall be chamfered 1"x1" unless otherwise noted. All construction joints to be made as shown on SCB-D6-67, Details B & C unless otherwise noted.

REINFORCEMENT

All reinforcement to have a clear cover of 2" unless otherwise noted.

DIMENSIONS

All dimensions given are measured horizontally or vertically unless otherwise noted. All dimensions given are for 68° F unless otherwise noted. Elevation datum is sea level based on nearest U.S. Government vertical control.

STRUCTURAL STEEL

Item 404-A shall include all structural steel, copper, wrought iron & any other materials indicated or required in the completed structure which are not otherwise classified. All structural steel shall be structural carbon steel conforming to the requirements of the specifications for steel bridges & buildings A.S.T.M. designation A-36, except as otherwise noted. The contractor shall submit complete details of the structural steel to the State of Vermont, Department of Highways, and receive their written approval prior to start of fabrication. The steel details shall include provisions for cambering of beams for dead load deflection as well as erection diagrams & falsework details. The final coat of field paint shall be green.

WATER REPELLENT

The following shall be covered w/ Water Repellent (Item 440): Top surface of safety walks, fascia, and back to face beam under the slab; the entire pier cap & columns, & all exposed areas of the abutment which are not otherwise treated.

FIELD BOLTING

Field-bolted connections shall be made with 7/8" ϕ A-325 High Strength bolts. Use of A-490 bolts is not permitted.

ABUTMENTS

The top surfaces of all abutments & piers shall be sloped 1/2" per foot from the back edge of the abutments & & piers to the front edge of the same, except for bearing pads, which shall be level. Given elevations of bridge seats are for center line of bearings. The entire exposed top surface of abutments (1,2,3,4) shall be coated with Asphaltic Asbestos coating 1/8" thick as per Item 407 of the specifications. The application of this item shall be performed only after all painting & other incidental items are completed. Fill, inside the abutments & not otherwise specified, shall meet the requirements of Granular Borrow, Item 105.

PILES

Cast-in-place Concrete Piling @ abutments & piers shall BE DRIVEN THRU PRE-DRILLED HOLES IN granular fill. Design load of pilings to be 40 tons.

PILE LOADING TESTS

Pile loading tests, Item 505, shall be used & paid for only when directed by the engineer. Two (2) will be required as a minimum.

BITUMINOUS CONCRETE PAVEMENT

Bituminous Concrete Pavement, Item ~~404 Modified~~ 406.25, Type IV, shall be the wearing surface on the bridge decks & applied in two courses.

GENERAL

All expansion material shall be pre-moulded cork containing no bitumen or asphalt.

DESIGN STRESSES

CONCRETE:
$f_c' = 3{,}000$ p.s.i.
$f_c = 1{,}200$ p.s.i.

STRUCTURAL STEEL
20,000 p.s.i. (A-36, other steels as per AASHO specs.)

REINFORCING STEEL
$f_s' = 20{,}000$ p.s.i. (tension)
$f_s = 16{,}000$ p.s.i. (Compression)

VERMONT
STATE HIGHWAY DEPARTMENT
TOWNS OF FAIRLEE-BRADFORD
INTERSTATE ROUTE 91

INTERSTATE 91 OVER
VERMONT ROUTE 25 BR58

PLAN AND ELEVATION

McFARLAND-JOHNSON
CONSULTING ENGINEERS
BINGHAMTON, NEW YORK

DESIGNED NA	CHECKED AMD	DATE 5-5-67
DRAWN HGR	IN CHARGE HGC	SCALE AS NOTED

PROJECT NO. 191 2(26) SH 380 OF 430

BR 201

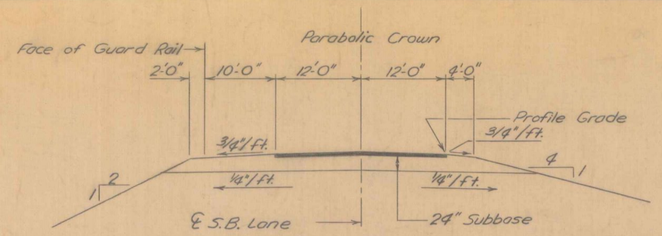

NEW HIGHWAY SECT. STA. 5175+00 TO STA. 5182+00

SCALE: 1"=10'

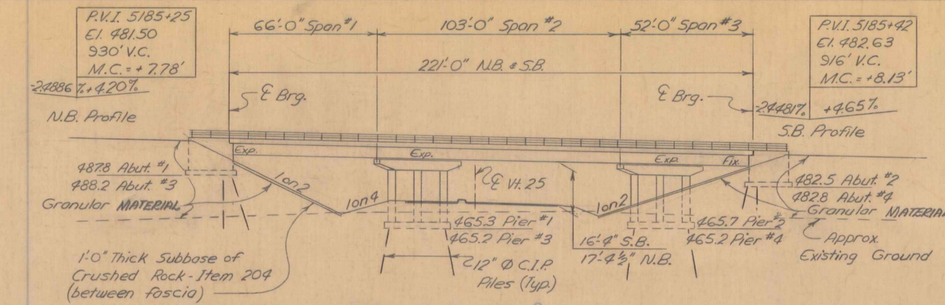

NEW HIGHWAY PROFILE ALONG ℄ I-91

SCALE: 1"=30'

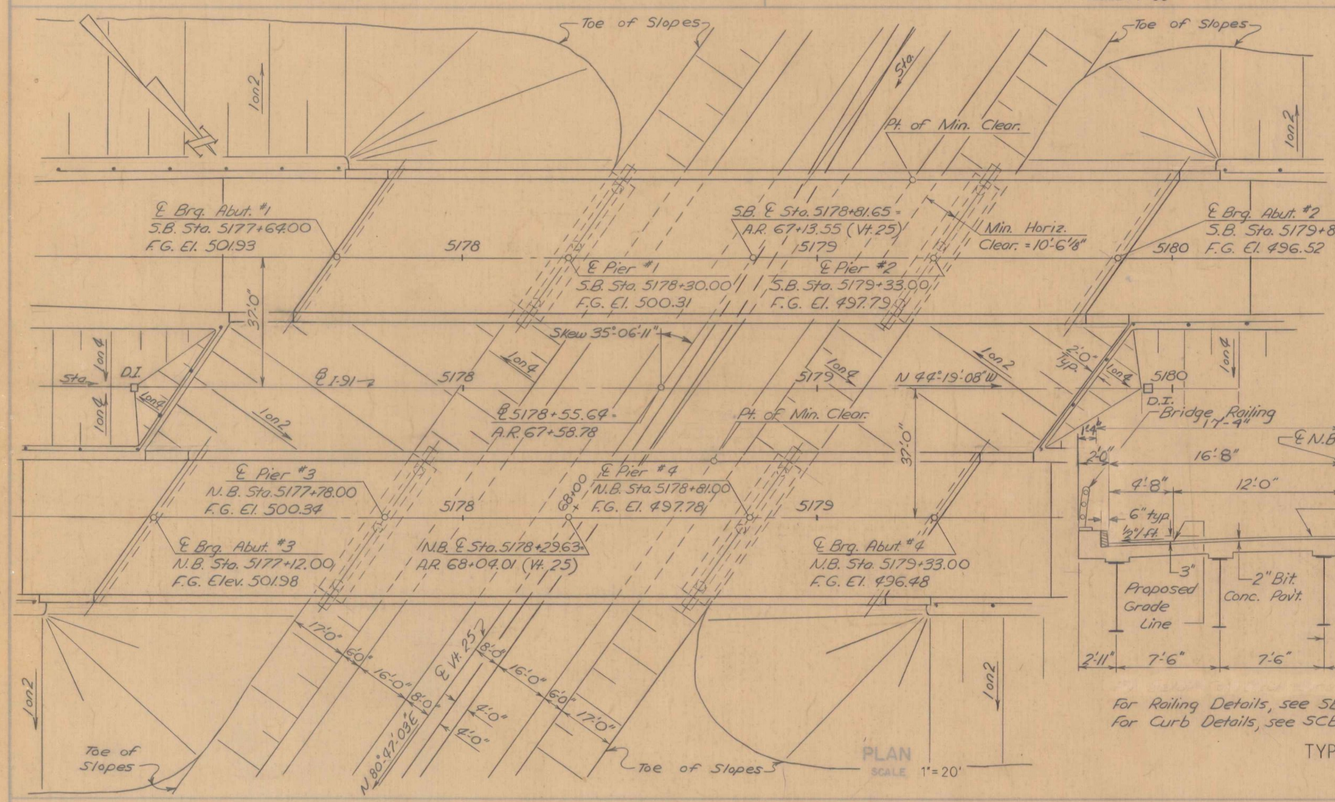

PLAN

SCALE: 1"=20'

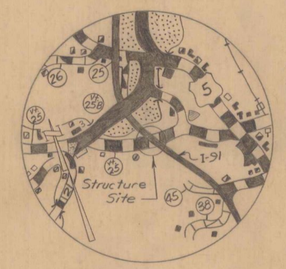

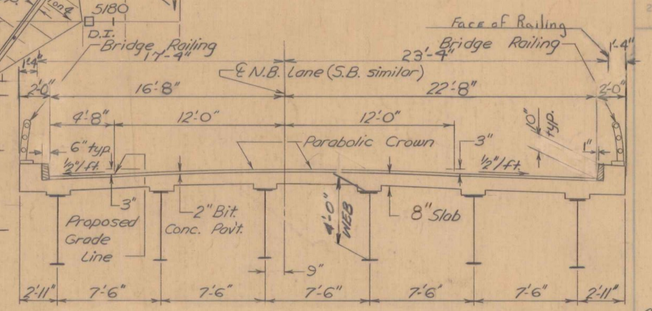

For Railing Details, see SB-R1-64, sheets 1 & 2, & SB-R2-65
For Curb Details, see SCB-D6-67

TYPICAL SECTION

SCALE: 1"-5'

HIGHWAY NO. I 91 NAME OF HIGHWAY INTERSTATE ROUTE 91
STRUCTURE NO. ____ COUNTY ORANGE TOWN BRADFORD
PROJECT NO. I 91-2(10) LOCATION I-91 OVER VT 25 (BRADFORD INTERCHANGE)

EXISTING STRUCTURE

1 RATED LOADING OF EXISTING STRUCTURE ____
2 TYPE OF EXISTING STRUCTURE ____
3 UNDERCLEARANCE ELEVATION OF EXISTING STRUCTURE ____
4 WHAT DISPOSITION SHOULD BE MADE OF EXISTING STRUCTURE? ____ COST OF REMOVAL ____
5 SHOULD EXISTING STRUCTURE BE USED TO MAINTAIN TRAFFIC DURING CONSTRUCTION OF NEW STRUCTURE? ____
6 SHOULD NEW TEMPORARY STRUCTURE BE BUILT? ____
7 ORDINARY HIGH WATER SURFACE ELEV. AT EXISTING STRUCTURE ____ WATERWAY TO ORDINARY H.W. ____
8 EXTREME HIGH WATER AT EXISTING STRUCTURE ____
9 SPAN OF EXISTING BRIDGE UPSTREAM ____ WATERWAY TO EXTREME H.W. ____
SPAN OF EXISTING BRIDGE DOWNSTREAM ____ WATERWAY TO EXTREME H.W. ____
10 TYPE OF FOUNDATION UNDER EXISTING ABUTMENTS ____
11 DOES ALL WATER AT FLOOD ELEVATION PASS THROUGH EXISTING STRUCTURE? ____
12 IF NOT AT WHAT ELEVATION IS RELIEF AFFORDED? ____
13 ADDITIONAL WATERWAY AREA PROVIDED ____

NEW STRUCTURE

1 RECOMMENDED TYPE OF STRUCTURE Three Span Continuous Welded Plate Girder, Composite
2 RECOMMENDED CLEAR SPAN OR SPANS 66'-0", 103'-0", 52'-0"
MEASURED PARALLEL TO ℄ NEW HIGHWAY 66'-0", 103'-0", 52'-0"
MEASURED AT RIGHT ANGLES TO ℄ STREAM ____
3 ARE THERE OBJECTIONS TO A PIER IN THE STREAM? ANSWER YES OR NO ____
4 ORDINARY HIGH WATER ELEVATION AT NEW STRUCTURE ____
5 EXTREME HIGH WATER ELEVATION AT NEW STRUCTURE ____ SOURCE OF INFORMATION ____
6 IS ALL WATER INTENDED TO PASS THROUGH NEW STRUCTURE? ____
7 DOES STREAM REACH ITS MAXIMUM HIGH WATER ELEVATION RAPIDLY? ____ IS ORDINARY RISE RAPID? ____
8 LOW WATER ELEVATION AT NEW STRUCTURE ____
9 DRAINAGE AREA IN ACRES ABOVE STRUCTURE ____ CHARACTER OF TERRAIN ____
10 IS STREAM EVER DRY ____
11 VELOCITY OF STREAM AT HIGH WATER STAGE ____ ESTIMATED DISCHARGE ____
12 AREA FULL OPENING ____ AREA BELOW ORDINARY H.W. ____
13 CHARACTER OF SCOUR ____ DRIFT ____ ICE ____
14 ESTIMATED DRAINAGE AREA ABOVE NATURAL OR ARTIFICIAL STORAGE ____
15 VERTICAL CLEARANCE ABOVE FLOOD ELEVATION ____
16 ARE SIDEWALKS REQUIRED? IF SO ON WHAT SIDE? No BOTH SIDES ____
17 RECOMMENDED TYPE OF PAVEMENT 2" Bituminous Concrete, 8" Concrete
18 TRAFFIC TO BE MAINTAINED UNDER ITEM NO. ____ ONE OR TWO WAYS ____ PROBABLE COST ____
19 PROBABLE COST OF CLEARING AND GRUBBING STREAM CHANNEL AT STRUCTURE SITE ____
20 SHOULD PROVISIONS BE MADE FOR PUBLIC UTILITIES? No
21 ESTIMATED ALLOWABLE LOAD ON FOUNDATIONS 40 Tons/Pile SHOULD PILES BE USED? Yes EST. LGTH. See Boring Log

FOUNDATION INFORMATION

OBTAINED FOR DESIGN PURPOSES ONLY, AND THE STATE ASSUMES NO RESPONSIBILITY WHATSOEVER FOR THE SUFFICIENCY OR ACCURACY OF THE INFORMATION SHOWN. BOULDERS MAY BE ENCOUNTERED AT ANY PIER OR ABUTMENT LOCATION.

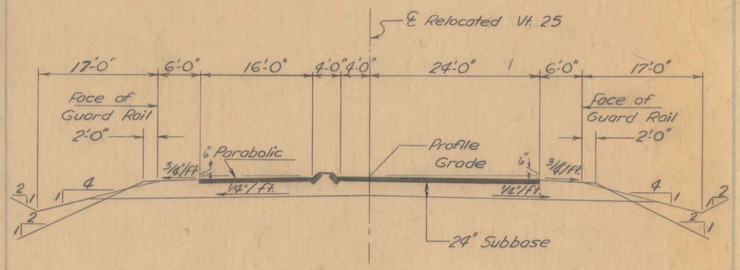

TYPICAL APPROACH SECTION (VT. RTE 25)

SCALE: 1" = 10'

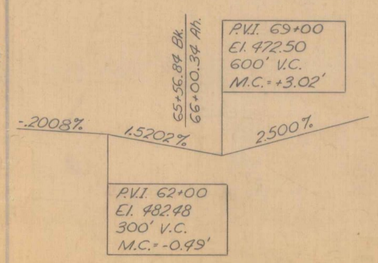

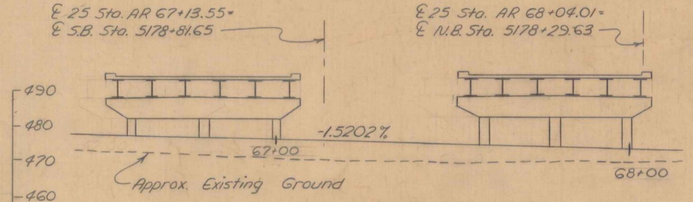

PROFILE OF PROPOSED RELOCATED VT. 25

SCALE: 1"-20'

Revised to brush curb; changed roadway width and curb width; revised to an eight (8) inch slab; changed Std. Dwg. dates; added center line to tailing distances. G. Rogers Aug. 1969

Note:

All materials and construction shall conform to the State of Vermont, Department of Highways, Standard Specifications for Highway and Bridge Construction dated April 1964 and AASHO Standard Specifications dated 1969.

Structure designed for HS 20-44 loading modified for National System of Interstate Highways, applied in accordance with the provisions of the AASHO Standard Specifications Art 1.2.8.

Design Stresses

Concrete: fc' = 3000 psi., fc = 1200 psi.
Structural Steel: fs = 20,000 psi.
(A-36 other steels as per AASHO specifications)
Reinforcing Steel: fs = 20,000 psi. (tension)
fs = 16,000 psi. (compression)

TOWN OF BRADFORD
IM 091-2(88)
SHEET 16 OF 26
BRIDGE 58N & 58S
FOR REFERENCE ONLY

RECOMMENDED FOR APPROVAL — CONSTRUCTION ENGINEER — DATE 12-18-69
RECOMMENDED FOR APPROVAL — BRIDGE ENGINEER — DATE 12/18/69
RECOMMENDED FOR APPROVAL — ASST. CHIEF ENGINEER — DATE 12/18/69
APPROVED BY — CHIEF ENGINEER — DATE 12/18/69

STATE OF VERMONT
DEPARTMENT OF HIGHWAYS
191 IN THE TOWNS OF
FAIRLEE - BRADFORD
ROUTE NO. 191 LOG STA. N B 5178+29.63 S B 5178+81.65
INTERSTATE 91 OVER VERMONT RTE. 25
McFARLAND - JOHNSON
CONSULTING ENGINEERS
SURVEYED BY D.K. DRAWN BY G.E.H. CHECKED BY B.D.K. IN CHARGE H.G.C. SCALE As Shown DATE 8-18-66
PROJECT NO. I 91-2(10) SHEET 171 OF 868

BR 203

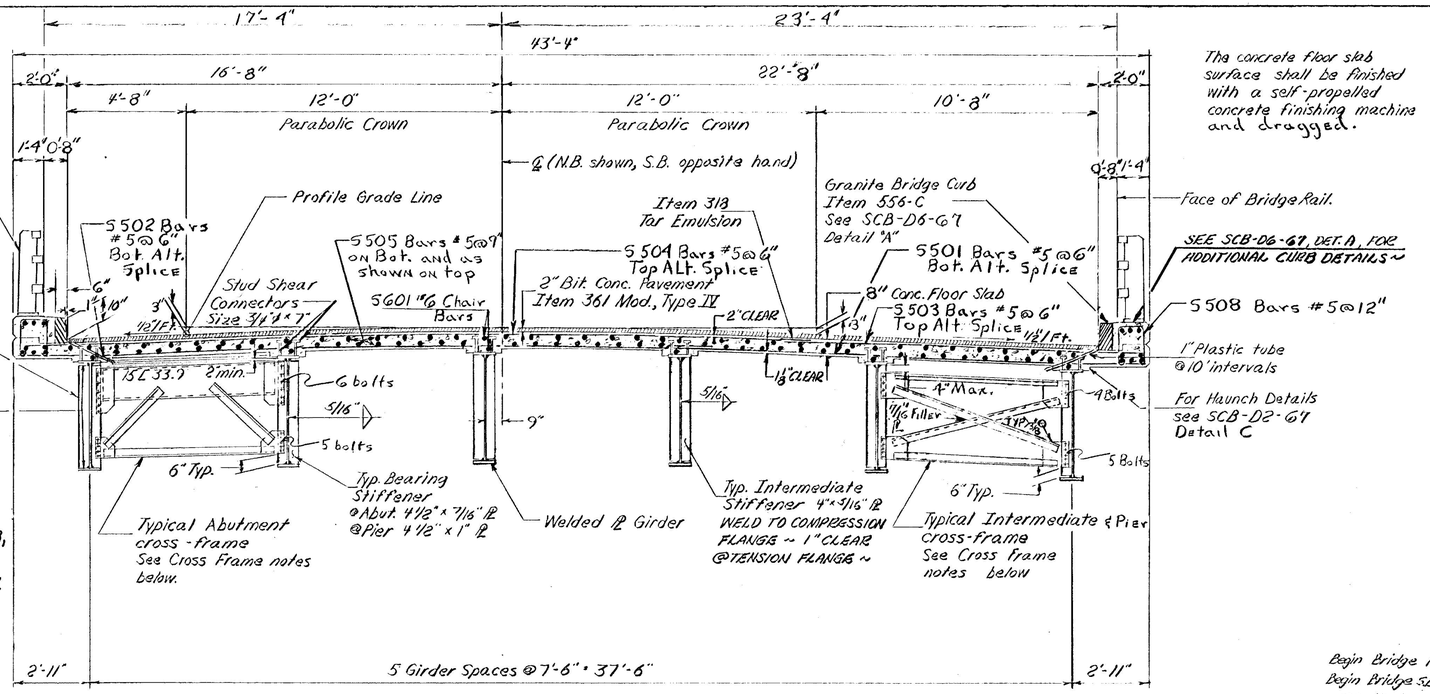

The concrete floor slab surface shall be finished with a self-propelled concrete finishing machine and dragged.

TYPICAL SECTION

Scale: 3/8" = 1'-0"

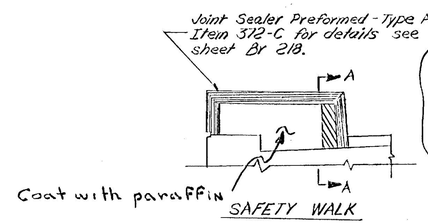

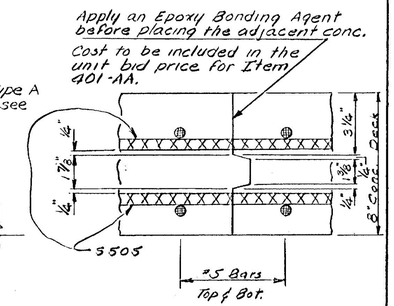

TRANSVERSE DECK CONSTRUCTION JOINT DETAILS

3" = 1'-0"

Note: Do not cut reinforcement at Joint.

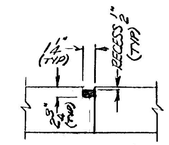

SECTION A-A

CURB SECTION JOINT DETAILS AT PIER

No Scale

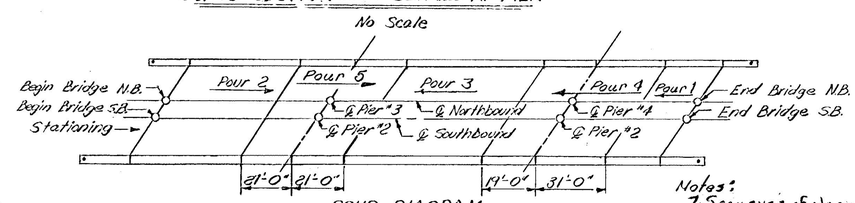

POUR DIAGRAM

Scale: 1" = 30'

Notes:
7. Sequence of placing sections 1 and 2, 4 and 5 may be interchanged.
8. Use of retarder is required in both sections 4 and 5 if these are to be placed during the same day.

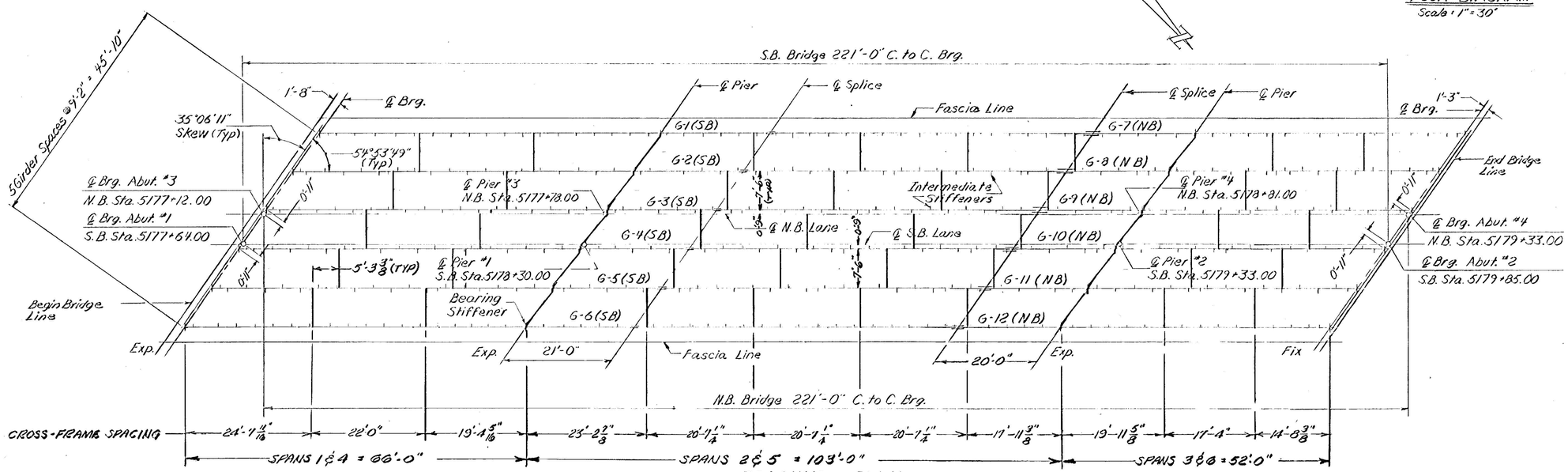

FRAMING PLAN

Scale: 3/32" = 1'-0"

NOTES:
1. For General Notes see Br. 201.
2. Cross-Frame Notes:
All gusset and connection plates shall be 7/16" plates and shall be connected to stiffeners with 7/8" high strength bolts. All angles shall be 4" x 4" x 3/8" angles.
3. All shop connections for cross-frames shall be 3/16" fillet welds. All field connections shall be 7/8" high strength bolts A 325.
4. All studs to be 3/4" ϕ x 7" welded studs. If 7/8" ϕ studs are used increase spacing shown for 3/4" ϕ studs by 50%.
5. Intermediate stiffeners to be placed on alternate sides of Interior Girders as shown on framing plan.
6. For Reinforcing Steel see Br. 222.

Revised Typical Section to reflect the change in size of stiffeners, revised spacing of cross frames ~ VHD-VHR-12/67 ~

Rev. to brush curb; added deck reinf.; chg. roadway width and curb width; added notes 7 and 8 to pour diagram; chg. Std. Dwg. dates, added crown details; added note on use of paraffin on curb; chg. two rows of intermediate crossframes to pier crossframes; added note on fit of stiffeners; chg. notes 2 + 3. O. Rogers Aug. 1968

VERMONT
STATE HIGHWAY DEPARTMENT
TOWNS OF FAIRLEE - BRADFORD
INTERSTATE ROUTE 91

INTERSTATE 91 OVER
VERMONT ROUTE 25

TYPICAL SECTION & FRAMING PLAN

McFARLAND-JOHNSON
CONSULTING ENGINEERS
BINGHAMTON, NEW YORK

DESIGNED NA	CHECKED RFC	DATE 5-5-67
DRAWN JFM	IN CHARGE HGC	SCALE AS SHOWN

PROJECT NO. I 91-2(10) SH 173 OF 868

BR 205

TOWN OF BRADFORD
IM 091-2(88)
SHEET 17 OF 26
BRIDGE 58N & 58S
FOR REFERENCE ONLY

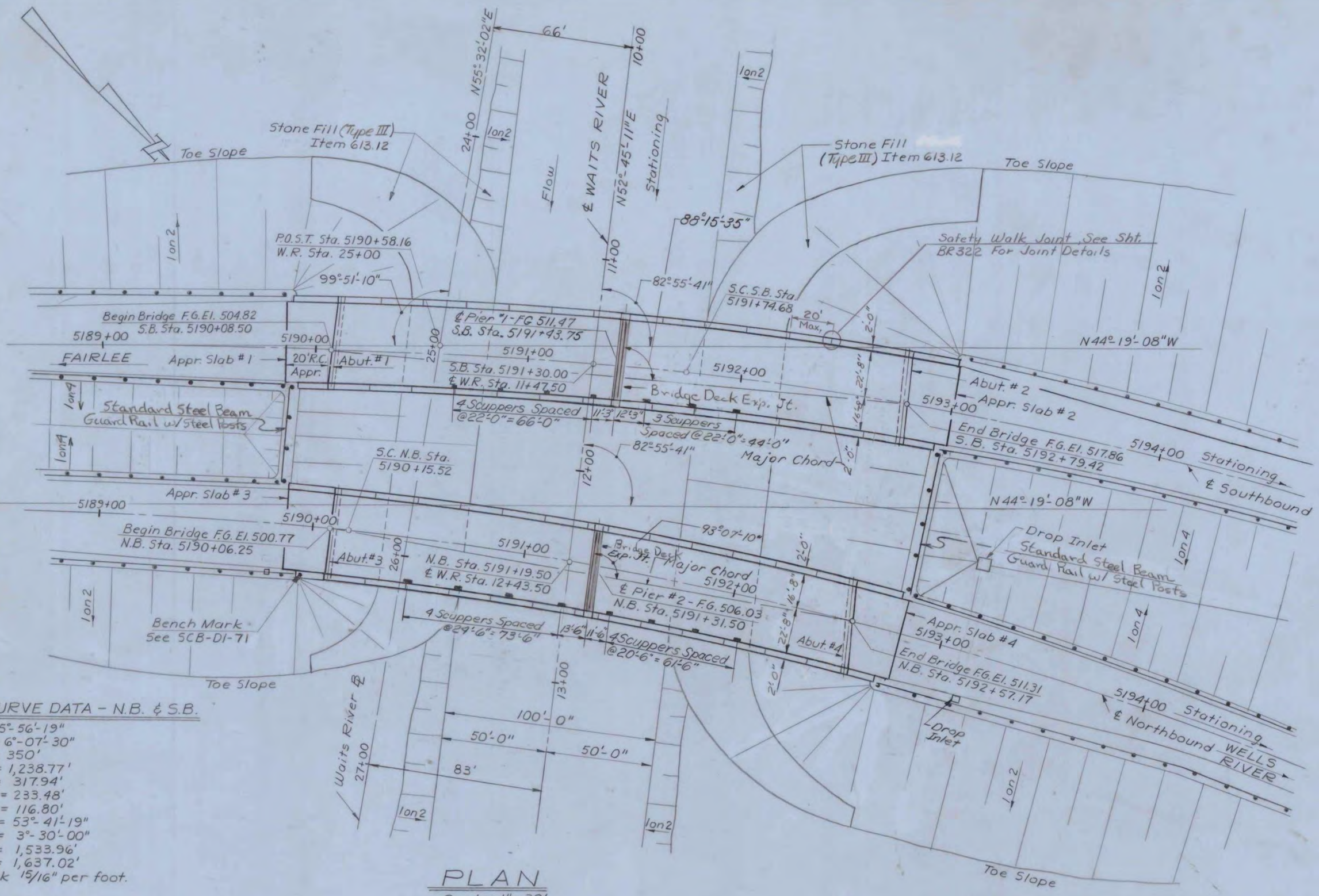

PLAN

Scale: 1" = 30'

℄ CURVE DATA – N.B. & S.B.

$\Delta = 65°-56'-19"$
$\Theta s = 6°-07'-30"$
$Ls = 350'$
$Ts = 1,238.77'$
$Es = 317.94'$
$L.T. = 233.48'$
$S.T. = 116.80'$
$\Delta c = 53°-41'-19"$
$Dc = 3°-30'-00"$
$Lc = 1,533.96'$
$Rc = 1,637.02'$
Bank 15/16" per foot.

NOTE:

1. Waits River ℄ sta. 23+50, 66' Left = Waits River ℄ sta. 10+00
2. Waits River ℄ sta. 27+00, 83' Left = Waits River ℄ sta. 13+50.41
3. Piers and Abutments are parallel with the centerline of the relocated channel.
4. S.B. Bridge is on super-elevation transition.
5. For Layout from Chord see BR306
6. Scupper Spacing maybe adjusted to match Stiffener location.

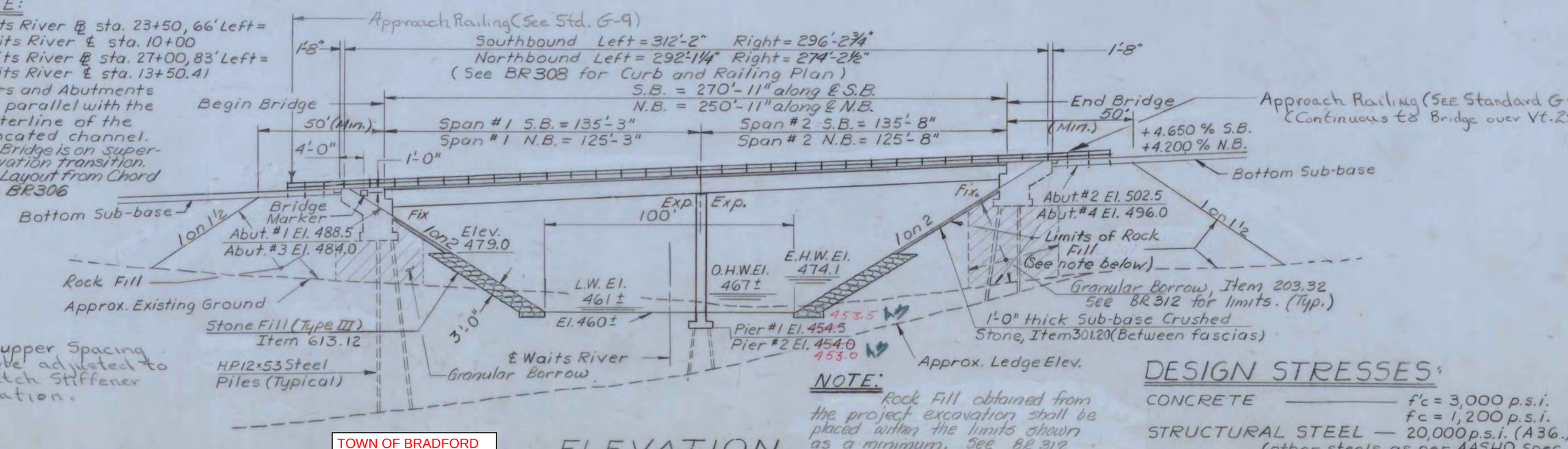

ELEVATION

Scale: 1" = 30'

NOTE:

Rock Fill obtained from the project excavation shall be placed within the limits shown as a minimum. See BR312 for details of Granular Borrow Chimneys.

DESIGN STRESSES:

CONCRETE — $f'c = 3,000$ p.s.i.
$fc = 1,200$ p.s.i.
STRUCTURAL STEEL — 20,000 p.s.i. (A36.)
(other steels as per AASHO Spec.)
REINFORCING STEEL — $fs = 20,000$ p.s.i. (tens.)
$fs = 16,000$ p.s.i. (comp.)

Rev to 1972 Spe

TOWN OF BRADFORD
IM 091-2(88)
SHEET 18 OF 26
BRIDGE 59N & 59S
FOR REFERENCE ONLY

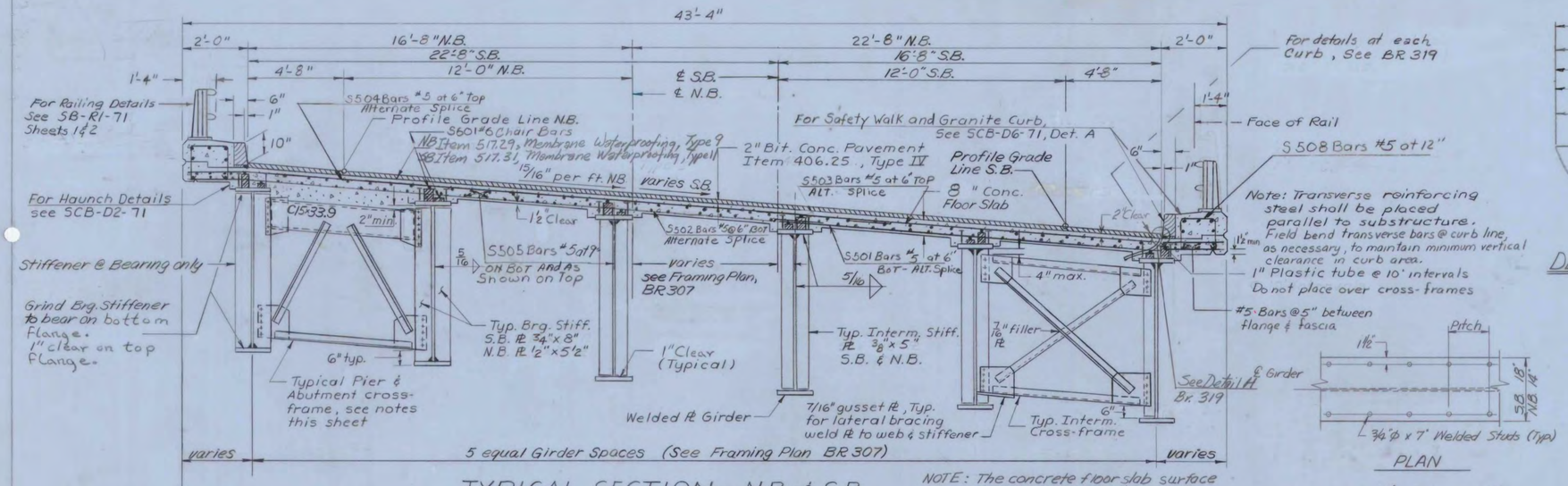

TYPICAL SECTION – N.B. & S.B.

Scale: 3/8" = 1'-0"

NOTE: The concrete floor slab surface shall be finished with a self-propelled concrete finishing machine and burlap dragged.

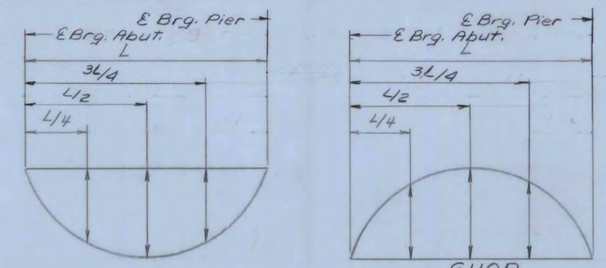

DEAD LOAD DEFLECTION DIAGRAM

SHOP CAMBER DIAGRAM

Maximum Live Load Deflection: N.B. 3/4" S.B. 7/8"

PLAN

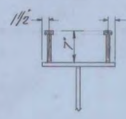

END VIEW

SHEAR CONNECTOR DETAILS
No Scale

DEAD LOAD DEFLECTION TABLE	L/4	L/2	3L/4
S.B. Fascia	2 1/16"	3 5/16"	2 1/16"
S.B. Interior	2 9/16"	3 7/16"	2 9/16"
N.B. Fascia	2 3/16"	2 15/16"	2 3/16"
N.B. Interior	2 1/4	2 13/16"	2 1/4"

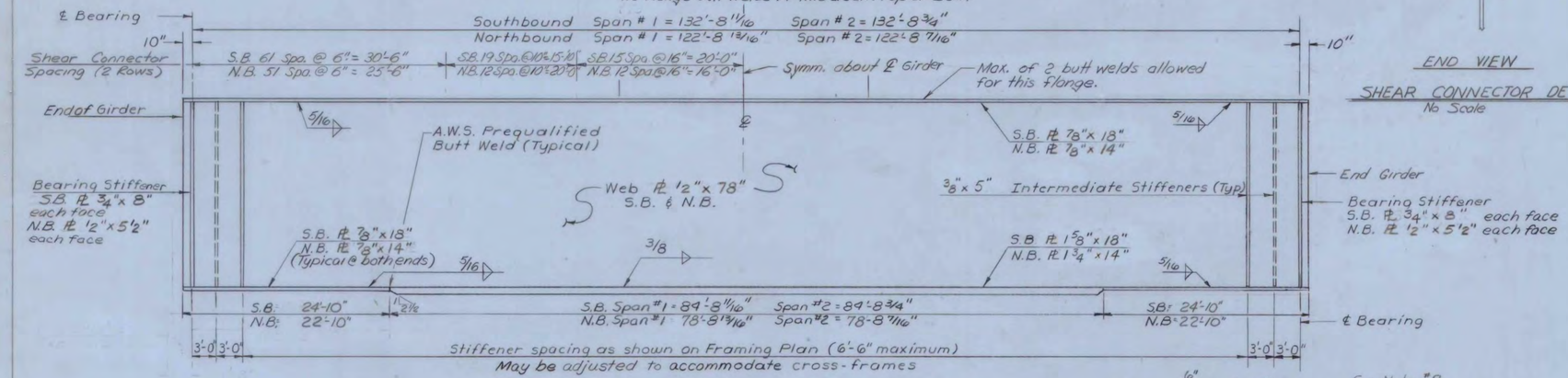

GIRDER DETAILS – N.B. & S.B.

Vert. Scale: 3/8" = 1'-0" Horiz. Scale: 1/8" = 1'-0"

~SHOP CAMBER TABLE~	L/4	L/2	3L/4
S.B. Fascia Span #1	3 7/16"	4 7/16"	3 7/16"
S.B. Interior Span #1	3¼"	4 9/16"	3¼"
S.B. Fascia Span #2	3 7/16	4 7/16"	3 7/16"
S.B. Interior Span #2	3½"	4 9/16"	3¼"
N.B. Fascia Span #1	2 ¾"	3 7/16"	2 ¾"
N.B. Interior Span #1	2 13/16"	3 9/16"	2 13/16"
N.B. Fascia Span #2	2 ¾"	3 7/16	2 ¾"
N.B. Interior Span #2	2 13/16"	3 7/16"	2 13/16"

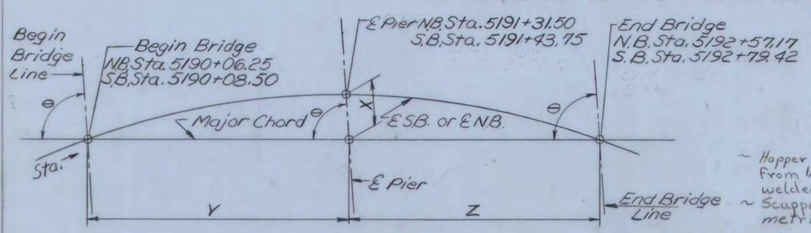

LOCATION	θ	X	Y	Z
S.B. BRIDGE	91°-44'-25"	4.94'	134.99	135.70
N.B. BRIDGE	86°-52'-50"	4.81'	125.40	125.28

LAYOUT FROM MAJOR CHORD

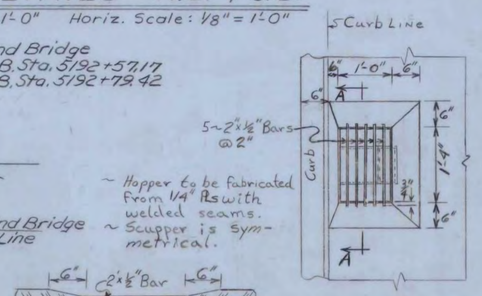

PLAN

~ Hopper to be fabricated from 1/4" PL's with welded seams.
~ Scupper is symmetrical.

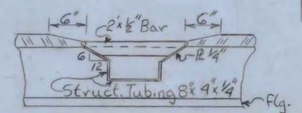

SECTION A-A

Revisions Stage II Items & Quantities RPG 6.73

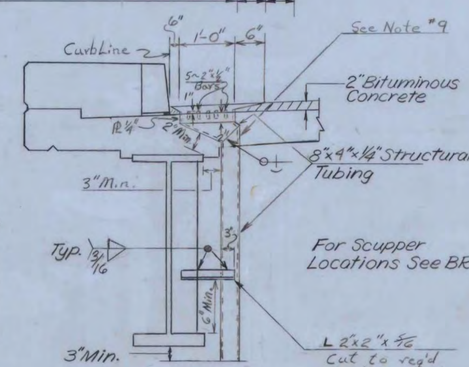

ELEVATION

SCUPPER DETAILS

No Scale

TOWN OF BRADFORD
IM 091-2(88)
SHEET 19 OF 26
BRIDGE 59N & 59S
FOR REFERENCE ONLY

NOTES:

1. For General Notes, see BR 303.
2. For Joint Details, see BR 309.
3. For Beam Haunch Details, see SCB-D2-71 C
4. CROSS-FRAME NOTES:
   All gusset and connection plates shall be 7/16" plates.
   All angles shall be 4"x4"x⅜" angles.
5. All shop connections for cross-frames shall be 5/16" fillet welds. All field connections shall be ⅞" ϕ high strength bolts.
6. Intermediate stiffeners to be placed on alternate sides of Interior Girders as shown on Framing Plan.
7. The shear connectors are designed to be ¾"ϕ x 7" welding studs. If ⅞" ϕ are used increase the spacing shown for ¾" ϕ studs by 50%.
8. Ends of girders and bearing stiffeners shall be vertical in erected position. Intermediate stiffeners shall be perpendicular to the flanges.
9. Apply epoxy bonding agent as approved by the Engineer prior to placing deck concrete. Cost of this work shall be incidental to Item 501.20.
10. The final coat of field paint shall be green.

Revised scupper details, rev. stiff. G. Rogers 12/18/69

Revisions
Rdwy Rev. to 39'4"
Safety Walk Rev to 2'-0"
Deck Steel added to TYPICAL SECTION
Rev. Cross Frame Connections on Details
Deck Thickness Rev. to 8"
R. ALDRICH 9/16/69

VERMONT
STATE HIGHWAY DEPARTMENT
TOWN OF BRADFORD
INTERSTATE ROUTE 91

INTERSTATE 91 OVER BR 59
WAITS RIVER

TYP. SECTION & GIRDER DETAILS

McFARLAND-JOHNSON
CONSULTING ENGINEERS
BINGHAMTON, NEW YORK

DESIGNED NA | CHECKED RFC | DATE 7-24-67
DRAWN RMG | IN CHARGE HGC | SCALE As SHOWN

PROJECT NO. I91-2(26) SH 387 OF 430

Stage II Construction

BR306

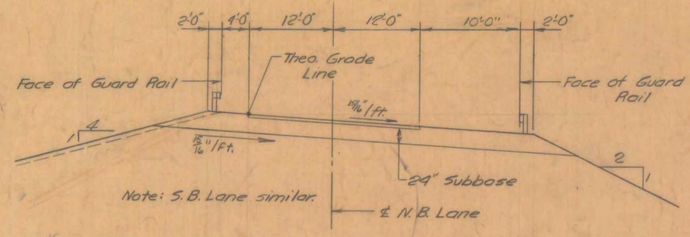

NEW HIGHWAY SECT. STA. 5194+00 TO STA. 5198+00

SCALE: 1"=10'

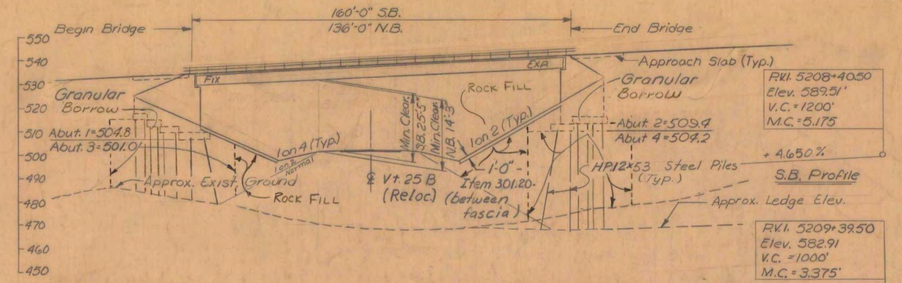

NEW HIGHWAY PROFILE ALONG ℄ N.B. & S.B. LANES

SCALE: 1"=30'

HIGHWAY NO.	I91
NAME OF HIGHWAY	INTERSTATE 91
STRUCTURE NO.	
COUNTY	ORANGE
TOWN	BRADFORD
PROJECT NO.	191-2(##)
LOCATION	I91 OVER VERMONT ROUTE 25B

EXISTING STRUCTURE

1 RATED LOADING OF EXISTING STRUCTURE
2 TYPE OF EXISTING STRUCTURE
3 UNDERCLEARANCE ELEVATION OF EXISTING STRUCTURE
4 WHAT DISPOSITION SHOULD BE MADE OF EXISTING STRUCTURE? COST OF REMOVAL
5 SHOULD EXISTING STRUCTURE BE USED TO MAINTAIN TRAFFIC DURING CONSTRUCTION OF NEW STRUCTURE?
6 SHOULD NEW TEMPORARY STRUCTURE BE BUILT?
7 ORDINARY HIGH WATER SURFACE ELEV. AT EXISTING STRUCTURE WATERWAY TO ORDINARY H.W.
8 EXTREME HIGH WATER AT EXISTING STRUCTURE
9 SPAN OF EXISTING BRIDGE UPSTREAM WATERWAY TO EXTREME H.W.
SPAN OF EXISTING BRIDGE DOWNSTREAM WATERWAY TO EXTREME H.W.
10 TYPE OF FOUNDATION UNDER EXISTING ABUTMENTS
11 DOES ALL WATER AT FLOOD ELEVATION PASS THROUGH EXISTING STRUCTURE?
12 IF NOT AT WHAT ELEVATION IS RELIEF AFFORDED?
13 ADDITIONAL WATERWAY AREA PROVIDED

NEW STRUCTURE

1 RECOMMENDED TYPE OF STRUCTURE 2 Single Span Bridges, Welded ℙ Girder, Composite
2 RECOMMENDED CLEAR SPAN OR SPANS 160'-0" S.B., 136'-0" N.B.
MEASURED PARALLEL TO ℄ NEW HIGHWAY " " , " "
MEASURED AT RIGHT ANGLES TO ℄ STREAM
3 ARE THERE OBJECTIONS TO A PIER IN THE STREAM? ANSWER YES OR NO
4 ORDINARY HIGH WATER ELEVATION AT NEW STRUCTURE
5 EXTREME HIGH WATER ELEVATION AT NEW STRUCTURE SOURCE OF INFORMATION
6 IS ALL WATER INTENDED TO PASS THROUGH NEW STRUCTURE?
7 DOES STREAM REACH ITS MAXIMUM HIGH WATER ELEVATION RAPIDLY? IS ORDINARY RISE RAPID?
8 LOW WATER ELEVATION AT NEW STRUCTURE
9 DRAINAGE AREA IN ACRES ABOVE STRUCTURE CHARACTER OF TERRAIN
10 IS STREAM EVER DRY
11 VELOCITY OF STREAM AT HIGH WATER STAGE ESTIMATED DISCHARGE
12 AREA FULL OPENING AREA BELOW ORDINARY H.W.
13 CHARACTER OF SCOUR DRIFT ICE
14 ESTIMATED DRAINAGE AREA ABOVE NATURAL OR ARTIFICIAL STORAGE
15 VERTICAL CLEARANCE ABOVE FLOOD ELEVATION
16 ARE SIDEWALKS REQUIRED? IF SO ON WHAT SIDE? No BOTH SIDES
17 RECOMMENDED TYPE OF PAVEMENT 2" Bit. Conc., 8" Conc.
18 TRAFFIC TO BE MAINTAINED UNDER ITEM NO. ONE OR TWO WAYS PROBABLE COST
19 PROBABLE COST OF CLEARING AND GRUBBING STREAM CHANNEL AT STRUCTURE SITE
20 SHOULD PROVISIONS BE MADE FOR PUBLIC UTILITIES? No
21 ESTIMATED ALLOWABLE LOAD ON FOUNDATIONS 58 TONS/PILE SHOULD PILES BE USED? Yes EST. LGTH. see boring log

FOUNDATION INFORMATION

OBTAINED FOR DESIGN PURPOSES ONLY, AND THE STATE ASSUMES NO RESPONSIBILITY WHATSOEVER FOR THE SUFFICIENCY OR ACCURACY OF THE INFORMATION SHOWN. BOULDERS MAY BE ENCOUNTERED AT ANY PIER OR ABUTMENT LOCATION.

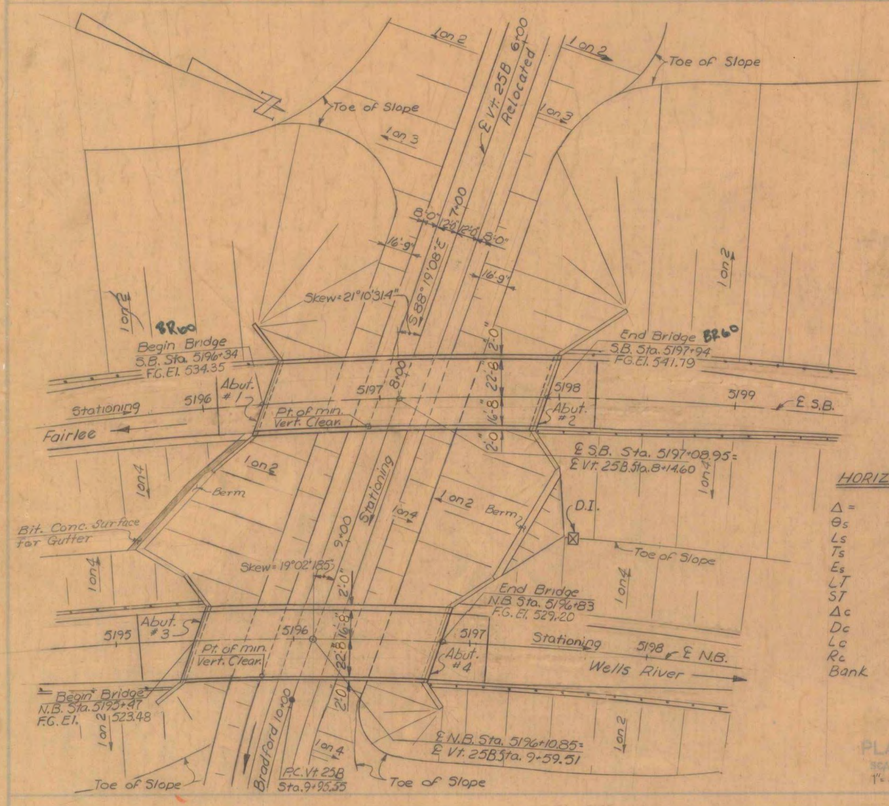

PLAN

SCALE: 1"=40'

Note:
All materials and construction shall conform to the State of Vermont, Department of Highways, Standard Specifications for Highway and Bridge Construction, dated January 1972, and AASHO Standard Specification dated 1969.
Structure designed for HS20-44 loading modified for National System of Interstate System of Interstate Highways, applied in accordance with the provisions of AASHO Standard Specifications Art. 1.2.8

Design Stresses:
Concrete: f'_c = 3000 psi.
f_c = 1,200 psi.
Structural Steel: f_s = 20,000 psi.
(A36 other steels as per AASHO Specifications)
Reinforcing Steel: f_s = 20,000 psi (tension)
f_s = 16,000 psi (compression)

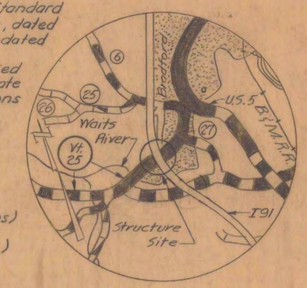

HORIZONTAL CURVE DATA

	N.B. & S.B.
Δ =	65°-56'-19"
θ_s	6°-07'-30"
Ls	350'
Ts	1238.77'
Es	317.94'
LT	233.48'
ST	116.80'
Δc	53°-41'-19"
Dc	3°-30'-00"
Lc	1533.96'
Rc	1637.02'
Bank	15/16" /ft.

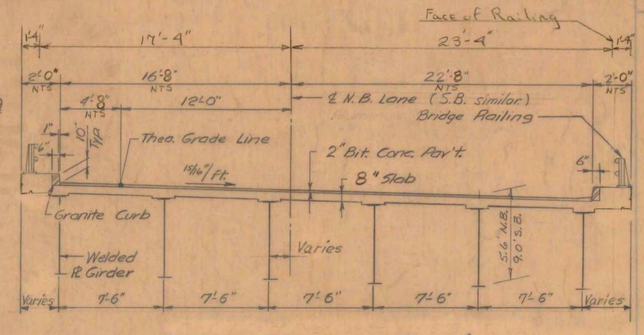

For Railing Details, see SB-R1-71 (2 Sheets)
For Curb Details, see SCB-D6-71

TYPICAL SECTION

SCALE: 1"=5'

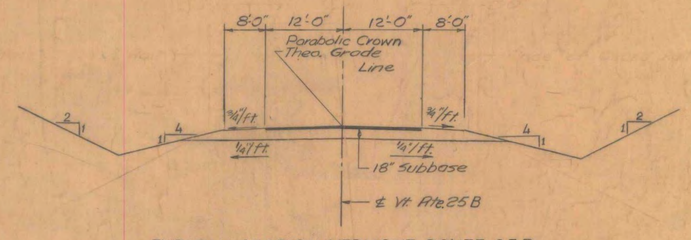

TYPICAL SECTION-VERMONT ROUTE 25B

SCALE: 1"=10'

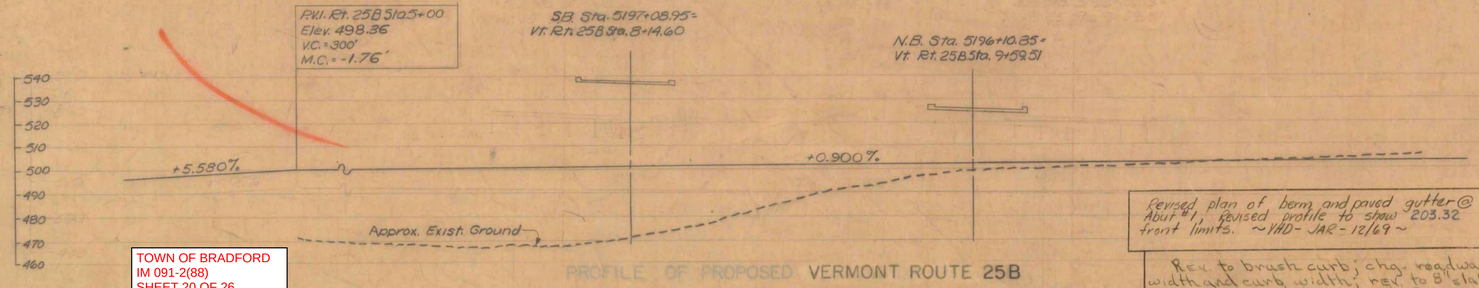

PROFILE OF PROPOSED VERMONT ROUTE 25B

SCALE: 1"=30'

TOWN OF BRADFORD
IM 091-2(88)
SHEET 20 OF 26
BRIDGE 60N & 60S
FOR REFERENCE ONLY

Revised plan of berm and paved gutter @ Abut #1, revised profile to show 203.32 front limits. ~YAD-JAR-12/69~

Rev. to brush curb; chg. roadway width and curb width; rev. to 8" slab; chg. std. dwg. dates; added ℄ to rail distances. G. Rogers Sept 1969

REVISIONS:
Changed Est. Load on Foundations BRK 2-13-67
Stepped flgs
9" to varies on typ sect
2'-11" to varies on typ sect
R. Casey Dec. 66

RECOMMENDED FOR APPROVAL — CONSTRUCTION ENGINEER — DATE 12-18-69
RECOMMENDED FOR APPROVAL — BRIDGE ENGINEER — DATE 12/18/69
RECOMMENDED FOR APPROVAL — ASST. CHIEF ENGINEER — DATE 12/18/69
APPROVED BY — CHIEF ENGINEER — DATE 12/18/69

STATE OF VERMONT
DEPARTMENT OF HIGHWAYS
I 91 IN THE TOWNS OF
BRADFORD BR 60
ROUTE NO. I 91 LOG STA. S.B. 5197+08.95 N.B. 5196+10.85
INTERSTATE OVER VERMONT ROUTE 25B
McFARLAND-JOHNSON CONSULTING ENGINEERS
SURVEYED BY F.C.H. DRAWN BY B.R.K. TRACED BY H.E.C. DATE 12/11/66 SCALE 1"=10' Shown
PROJECT NO. 191-2(26) SHEET NO. 394 OF 430

Stage II Construction

BR401

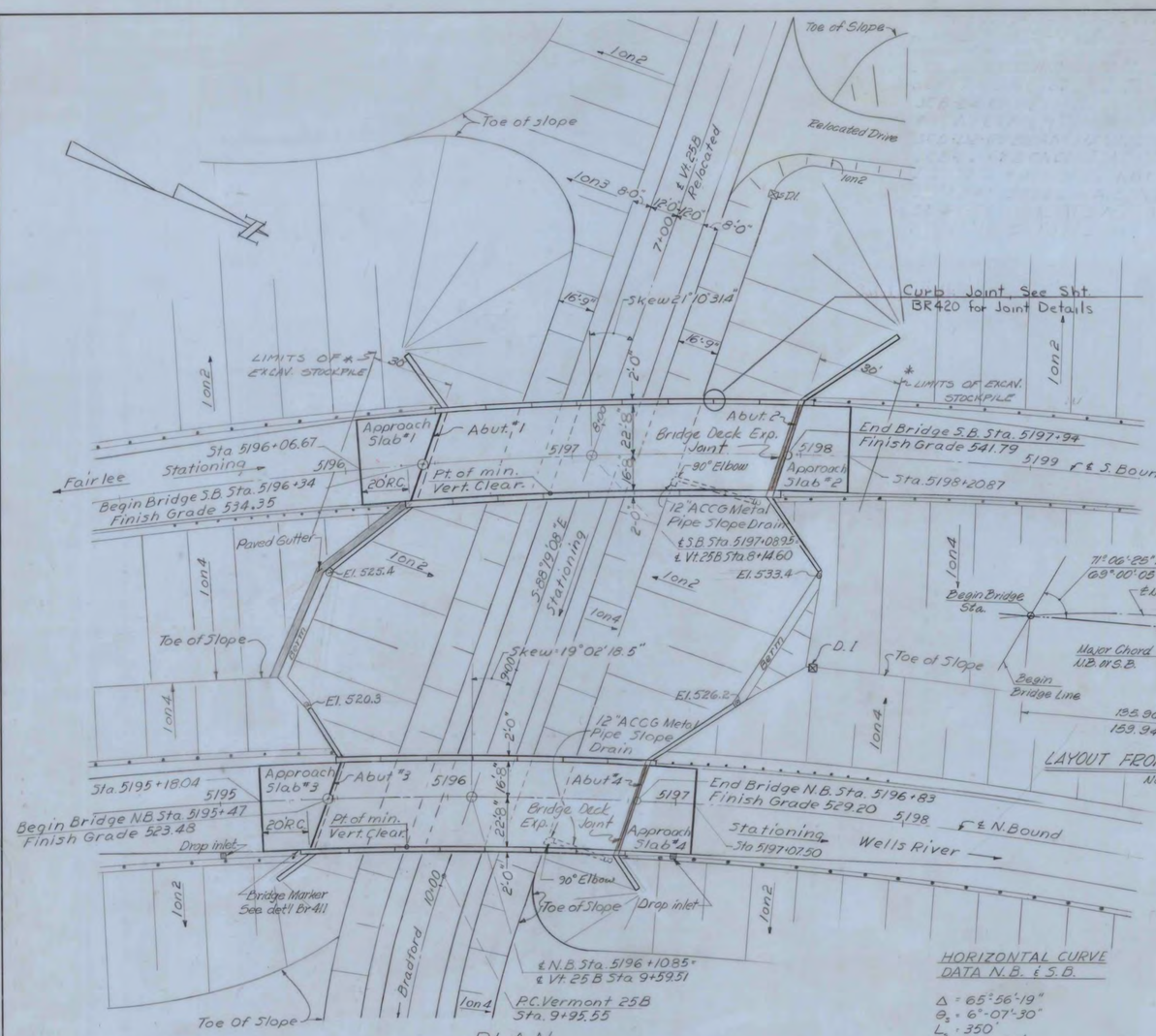

PLAN

Scale 1" = 30'-0"

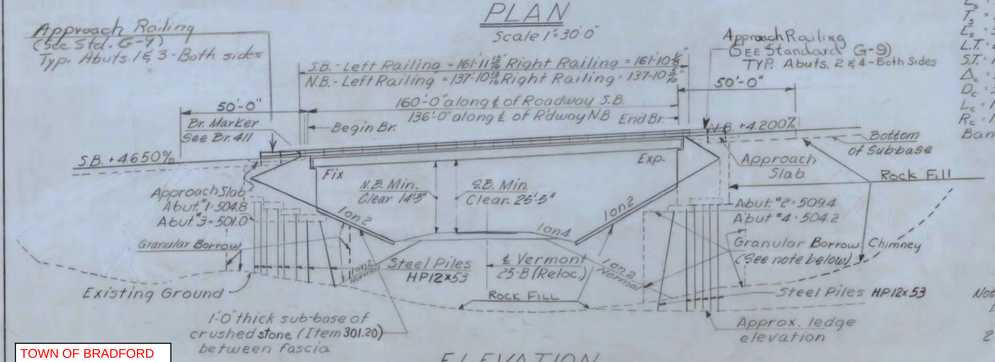

ELEVATION

Scale 1" = 30'-0"

* BUTTRESSES ADDED 4-73

Revised plan of exp. dam, paved gutter, & berm @ Abut. #1 added forward limits of Granular Borrow. UHD-JAR-12/69

HORIZONTAL CURVE DATA N.B. & S.B.

$\Delta = 65°56'19"$
$\theta_s = 6°07'30"$
$L_s = 350'$
$T_s = 1238.77'$
$L_c = 317.94$
$L.T. = 233.48$
$S.T. = 116.80$
$\Delta_c = 53°41'19"$
$D_c = 3°30'00"$
$L_c = 1533.96$
$R_c = 1637.02$
Bank 15/16"/ft.

Note:
1. For Curb and Railing Plan see Br. 418
2. Chimneys surrounding piling shall be built with Item 203.32, Granular Borrow. See BR 414 for additional details.

GENERAL NOTES:

SPECIFICATIONS:
All materials and construction shall conform to the State of Vermont, Department of Highways, Standard Specifications for Highway and Bridge Construction dated January 1972, and the AASHO Standard Specifications dated 1969.

LIVE LOAD:
Structure designed for HS 20-44 loading modified for National System of Interstate Highways applied in accordance with provisions of the AASHO Standard Specifications, Article 1.2.8.

CONCRETE:
All exposed edges of concrete shall be chamfered 1"×1" unless otherwise noted. All construction joints are to be made as shown on SCB-D6-71, details B & C unless otherwise noted.

DIMENSIONS:
All dimensions given are measured horizontally or vertically unless otherwise noted. Dimensions given are for 68°F unless otherwise noted. Elevation datum is sea level based on nearest U.S. Government vertical control.

STRUCTURAL STEEL:
Item 506.91 shall include all structural steel, copper, wrought iron, and any other materials indicated or required in the completed structure which are not otherwise classified. Roadway expansion dams are to be paid for as Item 516.25
All structural steel shall be structural carbon steel conforming to the requirements of the specifications for steel bridges and buildings A.S.T.M. designation A-36 , except as otherwise noted.

The Contractor shall submit complete details of the structural steel to the State of Vermont, Department of Highways, and receive its written approval prior to start of fabrication. The steel details shall include provisions for cambering of beams, for dead load deflection as well as erection diagrams and falsework details.

The final coat of field paint shall be green.

WATER REPELLENT:
The top surfaces of curbs, fascia and back to the fascia beam under the slab, exposed areas of abutments not otherwise treated shall be covered with Water Repellent, (Item 514.10)

FIELD BOLTING:
Field bolted connections shall be made with 7/8" ϕ A325 High Strength Bolts. A490 bolts are not allowed.

ABUTMENTS:
The top surfaces of all bridge seats (1, 2, 3 & 4) shall be sloped 1/8" per foot from the back edge of the bridge seat to the front edge of the abutment except for bearing pads which shall be level. Elevation of Bridge Seats given are for centerline of bearings.
The entire exposed top surface of abutments (1 & 3) shall be coated with Water Repellent Item 514.10, abutments (2 & 4) shall be coated with Epoxy Coating Compound Item 615.20. The application of this item shall be after all painting and incidental items are completed. Fill inside the abutments, not otherwise specified, shall meet the requirements of Granular Borrow, Item 203.32

STEEL PILES:
Steel Bearing Piles shall be driven to ledge rock unless otherwise approved by the Engineer. When piles are driven in fill, the material shall be such as to have no stones large enough to interfere with the driving of the piles. Pile point reinforcement shall be provided.

GENERAL:
Cross slopes of approach slabs are to conform to the cross slope of the bridge. All expansion material shall be premoulded cork containing no bitumen or asphalt.

BITUMINOUS CONCRETE PAVEMENT:
Bituminous Concrete Pavement, (Item 406.25) Type IV, shall be applied in two courses.

REINFORCEMENT:
All reinforcement to have a clear cover of 2" unless otherwise noted.

INDEX OF DRAWINGS

BR401	PRELIMINARY INFORMATION SHEET
BR402	QUANTITY SHEET
BR403	PLAN & ELEVATION
BR404	BORING LOG
BR405	SUPERSTRUCTURE DETAILS & S.B. FRAMING PLAN
BR406	SUPERSTRUCTURE DETAILS & N.B. FRAMING PLAN
BR407	SUPERSTRUCTURE DETAILS
BR408	JOINT DETAILS
BR409	ABUTMENT NO. 1
BR410	ABUTMENT NO. 2
BR411	ABUTMENT NO. 3
BR412	ABUTMENT NO. 4
BR413	WINGWALLS 1-A, 1B, & 2-A-2B
BR414	WINGWALLS 3-A, 3-B, & 4-A-4-B
BR415	ABUTMENT NO. 1 & NO. 2 FOOTING
BR416	ABUTMENT NO. 3 & NO. 4 FOOTING
BR417	WINGWALL TYPICAL SECTIONS
BR418	WINGWALL TYPICAL SECTIONS
BR419	APPROACH SLAB NO. 1
BR420	APPROACH SLAB NO. 2
BR421	APPROACH SLAB NO. 3
BR422	APPROACH SLAB NO. 4
BR423	STEEL REINFORCING DETAILS
BR424	STEEL REINFORCING DETAILS
BR425	STEEL REINFORCING DETAILS
BR426	STEEL REINFORCING DETAILS
BR426-A	STEEL REINFORCING DETAILS

DESIGN STRESSES

CONCRETE - f'_c = 3,000 P.S.I.
f_c = 1,200 P.S.I.
STRUCTURAL STEEL - 20,000 P.S.I. A-36 STEEL
OTHER STEELS AS PER AASHO SPECIFICATIONS
REINFORCING STEEL - f_s = 20,000 P.S.I. TENSION
f_s = 16,000 P.S.I. COMPRESSION

STANDARD DRAWINGS

SCB-D1-71	General Notes	12-14-71
SCB-D2-71	Det. ©	12-14-71
SCB-D4-71	Rein. Layout	12-14-71
SCB-D6-71	Det. Ⓐ, Ⓑ, Ⓕ	12-14-71
SB-R1-71	Sht. 1 of 2	8-24-71
SB-R1-71	Sht. 2 of 2	10-5-71 R

Rev. to brush curb, chg. rdway width and curb width; added rev. dates to Std. Dwg.; chg. note on water repellent. G. Rogers Sept 1969

VERMONT
STATE HIGHWAY DEPARTMENT
TOWN OF BRADFORD
INTERSTATE ROUTE 91

I-91 OVER VERMONT ROUTE 25B

PLAN & ELEVATION

BR 60

McFARLAND-JOHNSON
CONSULTING ENGINEERS
BINGHAMTON NEW YORK

DESIGNED B.K.	CHECKED A.M.	DATE July 28, 1967
DRAWN RMD·RC	IN CHARGE H.C.	SCALE As Noted

PROJECT NO. I-91 2(26) SH 396 OF 430

Stage II Construction

BR. 403

TOWN OF BRADFORD
IM 091-2(88)
SHEET 21 OF 26
BRIDGE 60N & 60S
FOR REFERENCE ONLY

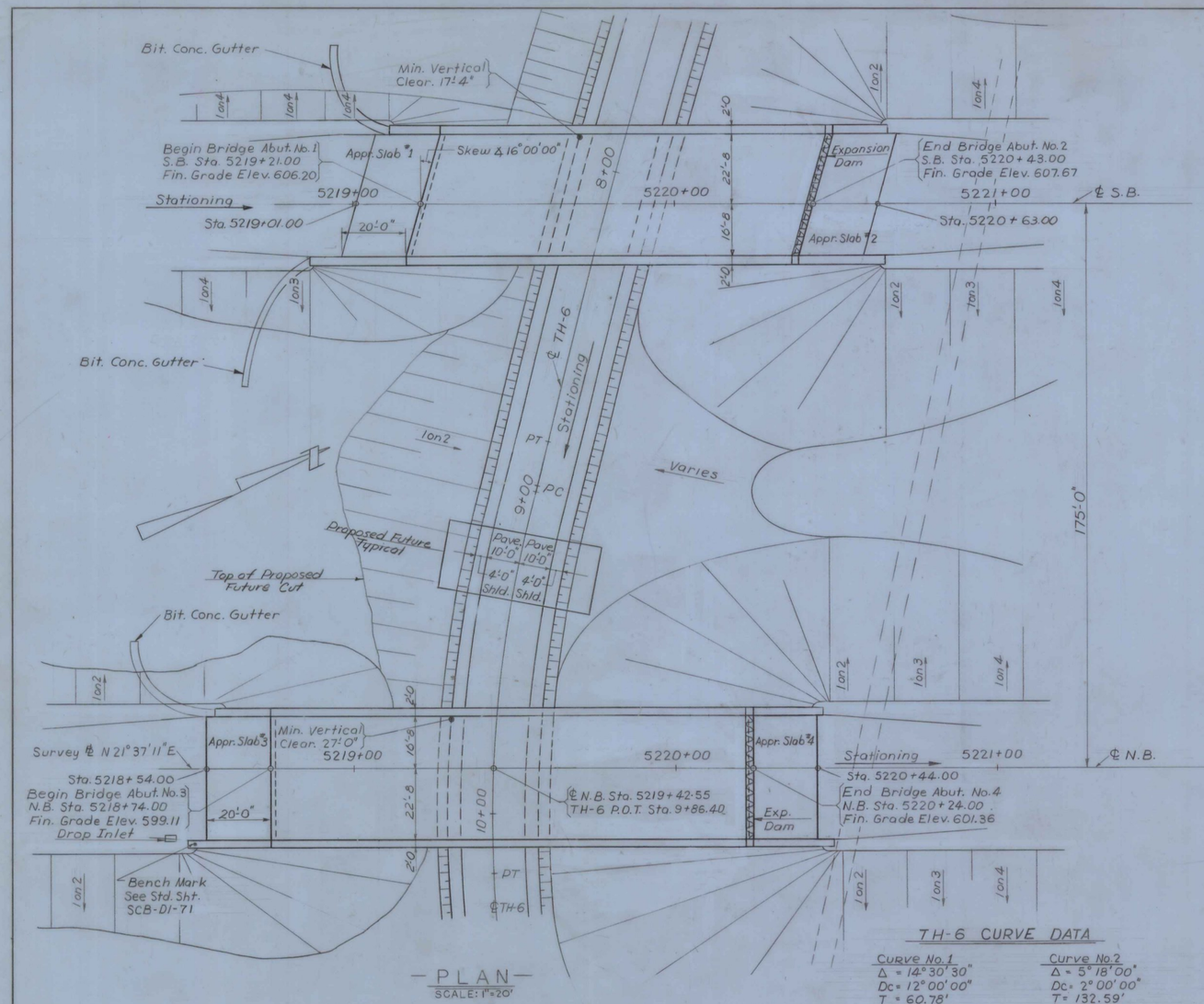

—PLAN—

SCALE: 1" = 20'

TH-6 CURVE DATA

Curve No. 1	Curve No. 2
Δ = 14°30'30"	Δ = 5°18'00"
Dc = 12°00'00"	Dc = 2°00'00"
T = 60.78'	T = 132.59'
L = 120.83'	L = 265.00'
P.C. = 8+98.07	P.C. = 6+18.28
P.T. = 10+18.90	P.T. = 8+83.28
P.I. = 9+58.85 Bk.	P.I. = 7+50.87 Bk.

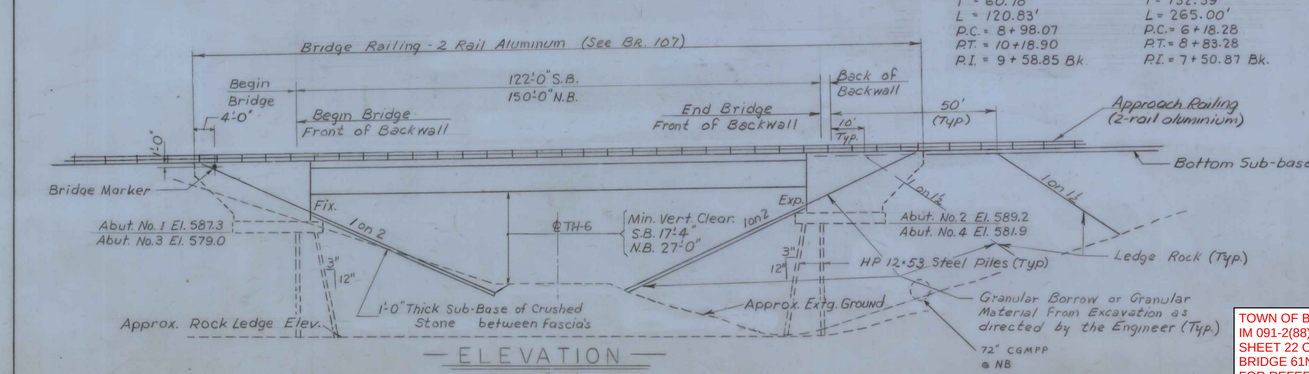

—ELEVATION—

SCALE: 1" = 20'

GENERAL NOTES:

SPECIFICATIONS:
All materials and construction shall conform to the State of Vermont, Department of Highways, Standard Specifications for Highway and Bridge Construction, dated Jan. 1972 and the AASHO Standard Specifications dated 1969, as modified by Current Interim Specifications.

LIVE LOAD:
Structure designed for HS20-44 loading modified for National System of Interstate Highways applied in accordance with the provisions of the AASHO Standard Specifications Article 1, 2, 8.

CONCRETE:
All exposed edges of concrete shall be chamfered 1"x1" unless otherwise noted. All construction joints to be made as shown on SCB-D6-71, details B and C unless otherwise noted. Superstructure concrete shall be Concrete Class A; all other concrete shall be Concrete Class B.

DIMENSIONS:
All dimensions given are measured horizontally or vertically unless otherwise noted. Dimensions given are for 68°F., unless otherwise noted. Elevation datum sea level based on nearest U.S. Government vertical control.

REINFORCEMENT:
All reinforcement is to have a clear cover of 2" unless otherwise noted.

STEEL PILES:
Steel bearing piles shall be driven to ledge rock unless otherwise approved by the Engineer. Fill material in areas where piles are to be driven shall be such as to have no stones large enough to interfere with the driving of the piles. Piles are designed for a maximum bearing capacity of 94 kips per pile.

BITUMINOUS CONCRETE PAVEMENT:
Bituminous Concrete Pavement, Type IV Mix, applied in two courses, shall be the wearing surface on the bridge deck and approach slabs.

WATER REPELLENT:
The top surface of safety walks, fascia, and back to the fascia beam under the slab, and all exposed areas of Abutments not otherwise treated shall be coated with Water Repellent.

FIELD BOLTING:
Field bolted connections shall be made with 7/8 ϕ A325 High Strength Bolts.

ABUTMENTS:
At Abutments No. 1 & 3, bridge seats and backwalls shall be coated with Water Repellent. At Abutments No. 2 & 4, bridge seats shall be coated with Epoxy Coating Compound and the backwalls shall be coated with Paint Waterproofing. Bridge Seats shall be finished as specified in General Note #14, Std. SCB-DI-71.

GENERAL:
All expansion material shall be premoulded cork containing no bitumen or asphalt. Cross slopes of Approach Slabs shall conform to the cross slope of the bridge. See Std. SCB-DI-71 for additional General Notes.

INDEX OF DRAWINGS:

BR 101 PLAN & ELEVATION
BR 102 QUANTITY SHEET
BR 103 PRELIMINARY INFORMATION SHEET
BR 104 BORING LOG
BR 105 SUPERSTRUCTURE DETAILS
BR 106 SUPERSTRUCTURE DETAILS
BR 107 SUPERSTRUCTURE DETAILS
BR 108 JOINT DETAILS
BR 109 ABUTMENT No. 1 & WINGWALL No. 1
BR 110 ABUTMENT No. 2 & WINGWALL No. 2
BR 111 ABUTMENT No. 3 & WINGWALL No. 3
BR 112 ABUTMENT No. 4 & WINGWALL No. 4
BR 113 ABUTMENT No. 1 & No. 2 FOOTING DETAILS & TYPICAL SECTIONS
BR 114 ABUTMENT No. 3 & No. 4 FOOTING DETAILS & TYPICAL SECTIONS
BR 115 APPROACH SLABS
BR 116-118 REINFORCING STEEL DETAILS

STANDARD DRAWINGS:

SCB-DI-71 1-24-72 R
SCB-D6-71, Det. A, B, C, & F 12-14-71
SCB-D9-71, Det. B 12-14-71
SB-R1-71, Sh. 1 of 2 8-24-71
SB-R1-71, Sh. 2 of 2 10-5-71 R

DESIGN STRESSES:

CONCRETE — fb = 3,000 p.s.i.
fc = 1,200 p.s.i.

STRUCTURAL STEEL — 20,000 p.s.i. (A36, other steels as per AASHO Spec.)

REINFORCING STEEL — fs = 20,000 p.s.i. (ten.)
fs = 16,000 p.s.i. (comp.)

Stage II Construction

REVISIONS

1. Revised bridge width, Granular Borrow limits, General Notes, and misc. details. W. Tripp 10-71

VERMONT
STATE HIGHWAY DEPARTMENT
TOWNS OF BRADFORD-NEWBURY
INTERSTATE ROUTE 91

INTERSTATE OVER TOWN HIGHWAY 6
PLAN & ELEVATION

McFARLAND - JOHNSON
CONSULTING ENGINEERS
BINGHAMTON, NEW YORK

DESIGNED B.R.K.	CHECKED AMcD	DATE 12-5-66
DRAWN R.L.D.	IN CHARGE H.G.C.	SCALE as noted

PROJECT NO. 191-2(26) SH 105 OF 430

BR 101

TOWN OF BRADFORD
IM 091-2(88)
SHEET 22 OF 26
BRIDGE 61N & 61S
FOR REFERENCE ONLY

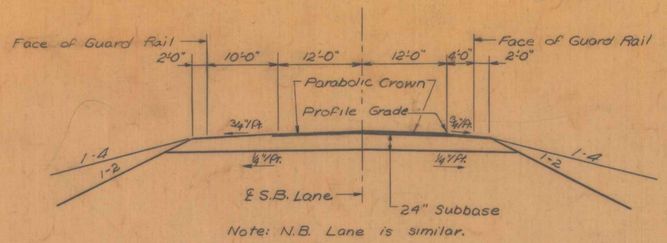

NEW HIGHWAY SECT. STA. 5218+00 TO STA. 5221+00

SCALE 1"=10'

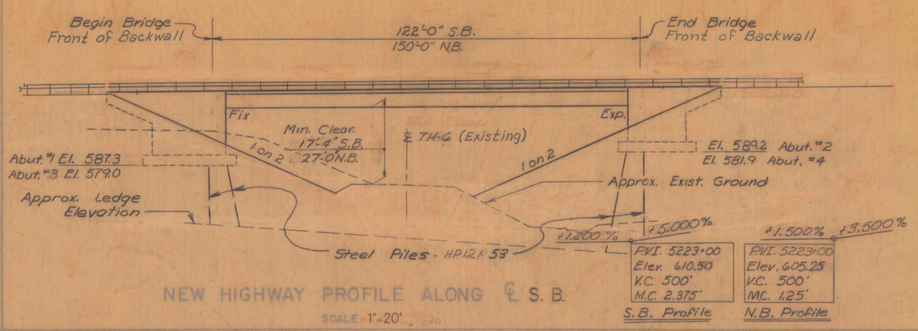

NEW HIGHWAY PROFILE ALONG ℄ S.B.

SCALE 1"=20'

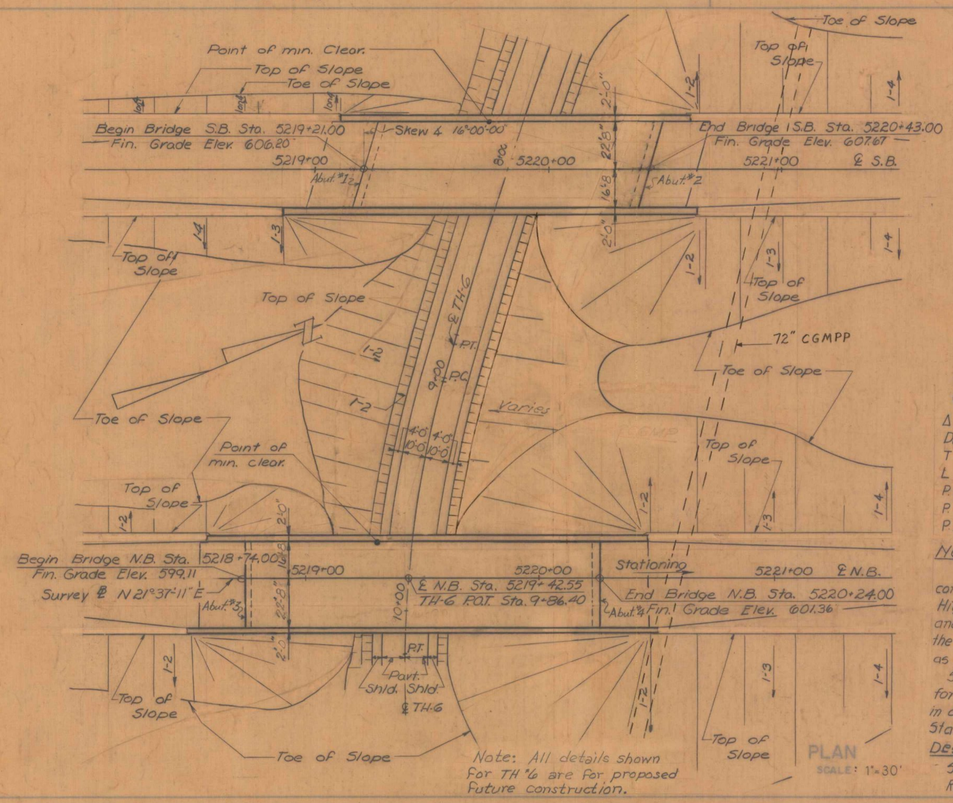

Note: All details shown for TH 6 are for proposed Future construction.

PLAN

SCALE: 1"=30'

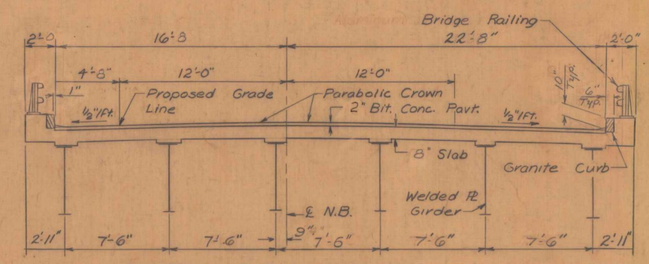

For Details of Deck Const., see BR 105 & 106
For Railing Details, see SB-RI-71, sheets 1 & 2.
For Curb Details, see SCB-D6-71.

TYPICAL SECTION - N.B.

SCALE 1"=5'

S.B. Similar except opposite hand

TH6 CURVE DATA

Curve #1	Curve #2
Δ = 14°-30'-30"	Δ = 5°-18'-00"
Dc = 12°-00'-00"	Dc = 2°-00'-00"
T = 60.78'	T = 132.59'
L = 120.83'	L = 265.00'
P.C. = 8+98.07	P.C. = 6+18.28
P.T. = 10+18.90	P.T. = 8+83.28
P.I. = 9+58.85 Bk.	P.I. = 7+50.87 Bk.

NOTE:

All materials and construction shall conform to the State of Vermont, Department of Highways, Standard Specifications for Highway and Bridge Construction, dated Jan. 1972 and the AASHO Standard Specifications dated 1969, as modified, by Interim Specifications.

Structure designed for HS 20-44 loading modified for National System of Interstate Highways applied in accordance with the provisions of the AASHO Standard Specifications. Article 1.2.8.

Design Stresses Concrete - fc = 3000 psi, fc = 1200 psi.
Structural steel - fs = 20,000 psi (A-36 other steels as per AASHO specification)
Reinforcing steel - fs = 20,000 psi (Tension); fs = 16,000 psi (Compression)

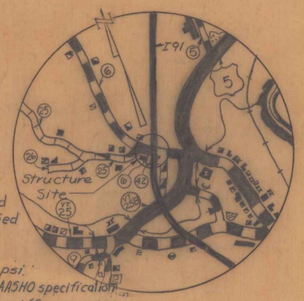

REVISIONS

1. Revised bridge widths and misc. details. W. Tripp 10-71

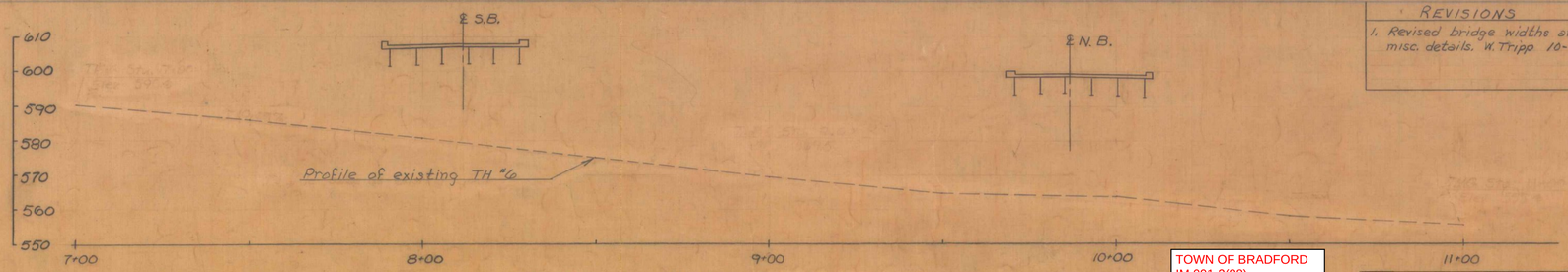

PROFILE OF PROPOSED TH-6

SCALE 1"=20'

TOWN OF BRADFORD
IM 091-2(88)
SHEET 23 OF 26
BRIDGE 61N & 61S
FOR REFERENCE ONLY

REVISONS
Wearing Surface Thickness - J.C.
Slope Lines - J.C. 3/14/66

HIGHWAY NO. I 91 NAME OF HIGHWAY INTERSTATE ROUTE 91
STRUCTURE NO. 1 COUNTY ORANGE TOWN BRADFORD
PROJECT NO. I91-2(11) LOCATION I91 OVER TH 6

EXISTING STRUCTURE

1 RATED LOADING OF EXISTING STRUCTURE —
2 TYPE OF EXISTING STRUCTURE —
3 UNDERCLEARANCE ELEVATION OF EXISTING STRUCTURE —
4 WHAT DISPOSITION SHOULD BE MADE OF EXISTING STRUCTURE? — COST OF REMOVAL —
5 SHOULD EXISTING STRUCTURE BE USED TO MAINTAIN TRAFFIC DURING CONSTRUCTION OF NEW STRUCTURE? —
6 SHOULD NEW TEMPORARY STRUCTURE BE BUILT? —
7 ORDINARY HIGH WATER SURFACE ELEV. AT EXISTING STRUCTURE — WATERWAY TO ORDINARY H.W. —
8 EXTREME HIGH WATER AT EXISTING STRUCTURE —
9 SPAN OF EXISTING BRIDGE UPSTREAM — WATERWAY TO EXTREME H.W. —
SPAN OF EXISTING BRIDGE DOWNSTREAM — WATERWAY TO EXTREME H.W. —
10 TYPE OF FOUNDATION UNDER EXISTING ABUTMENTS —
11 DOES ALL WATER AT FLOOD ELEVATION PASS THROUGH EXISTING STRUCTURE? —
12 IF NOT AT WHAT ELEVATION IS RELIEF AFFORDED? —
13 ADDITIONAL WATERWAY AREA PROVIDED —

NEW STRUCTURE

1 RECOMMENDED TYPE OF STRUCTURE 2 Single Span Bridges, Welded Pl. Girders
2 RECOMMENDED CLEAR SPAN OR SPANS 122'-0" S.B., 150'-0" N.B.
MEASURED PARALLEL TO ℄ NEW HIGHWAY —
MEASURED AT RIGHT ANGLES TO ℄ STREAM —
3 ARE THERE OBJECTIONS TO A PIER IN THE STREAM? ANSWER YES OR NO —
4 ORDINARY HIGH WATER ELEVATION AT NEW STRUCTURE —
5 EXTREME HIGH WATER ELEVATION AT NEW STRUCTURE — SOURCE OF INFORMATION —
6 IS ALL WATER INTENDED TO PASS THROUGH NEW STRUCTURE? —
7 DOES STREAM REACH ITS MAXIMUM HIGH WATER ELEVATION RAPIDLY? — IS ORDINARY RISE RAPID? —
8 LOW WATER ELEVATION AT NEW STRUCTURE —
9 DRAINAGE AREA IN ACRES ABOVE STRUCTURE — CHARACTER OF TERRAIN —
10 IS STREAM EVER DRY —
11 VELOCITY OF STREAM AT HIGH WATER STAGE — ESTIMATED DISCHARGE —
12 AREA FULL OPENING — AREA BELOW ORDINARY H.W. —
13 CHARACTER OF SCOUR — DRIFT — ICE —
14 ESTIMATED DRAINAGE AREA ABOVE NATURAL OR ARTIFICIAL STORAGE —
15 VERTICAL CLEARANCE ABOVE FLOOD ELEVATION —
16 ARE SIDEWALKS REQUIRED? IF SO ON WHAT SIDE? No BOTH SIDES —
17 RECOMMENDED TYPE OF PAVEMENT 2" Bituminous Concrete, 8" Concrete
18 TRAFFIC TO BE MAINTAINED UNDER ITEM NO. — ONE OR TWO WAYS — PROBABLE COST —
19 PROBABLE COST OF CLEARING AND GRUBBING STREAM CHANNEL AT STRUCTURE SITE —
20 SHOULD PROVISIONS BE MADE FOR PUBLIC UTILITIES? No
21 ESTIMATED ALLOWABLE LOAD ON FOUNDATIONS 6,000 psi SHOULD PILES BE USED? Yes EST. LGTH. see Boring Log

FOUNDATION INFORMATION

OBTAINED FOR DESIGN PURPOSES ONLY, AND THE STATE ASSUMES NO RESPONSIBILITY WHATSOEVER FOR THE SUFFICIENCY OR ACCURACY OF THE INFORMATION SHOWN. BOULDERS MAY BE ENCOUNTERED AT ANY PIER OR ABUTMENT LOCATION.

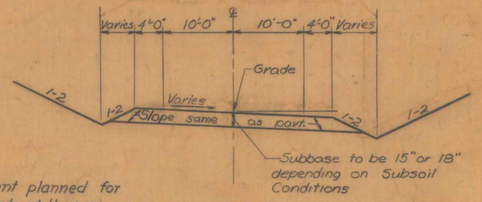

NOTE:

No improvement planned for TH-6 in this contract. However bridge has been designed to accomodate possible future improvements as shown in plan.

FUTURE TYPICAL SECTION TH-6

SCALE 1"=10'

Stage 1 Construction

RECOMMENDED FOR APPROVAL	E. H. Dickney, CONSTRUCTION ENGINEER	9/25/65 DATE
RECOMMENDED FOR APPROVAL	Lin Bjorn, BRIDGE ENGINEER	9/24/65 DATE
RECOMMENDED FOR APPROVAL	R. H. Crook, ASST. CHIEF ENGINEER	9/27/65 DATE
APPROVED BY	A. D. Bishop, CHIEF ENGINEER	9/27/65 DATE

STATE OF VERMONT
DEPARTMENT OF HIGHWAYS

I91 IN THE TOWNS OF
BRADFORD-NEWBURY
ROUTE NO. I91 LOG STA. S.B. 5219+82 N.B. 5219+42
INTERSTATE OVER TH6

McFARLAND - JOHNSON
CONSULTING ENGINEERS

SURVEYED BY R.V.E. DRAWN BY F.J.H. CHECKED BY B.R.K. H.G.C. SCALE As Shown DATE 9-3-65
PROJECT NO. I91-2(11) SHEET 72 OF 219

CONTRACT NO. 1

BR 103

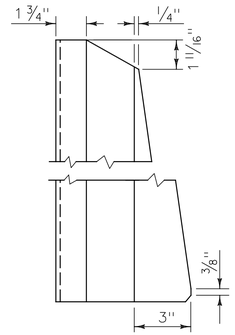

POST SIDE VIEW

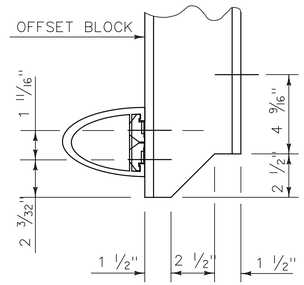

COPING DETAIL

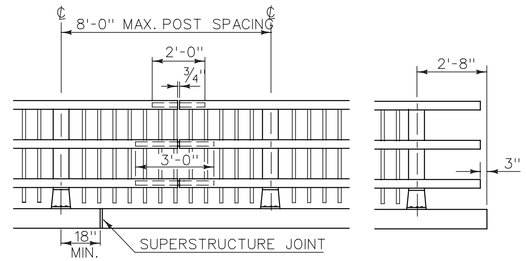

FRONT ELEVATION OF THREE RAIL WITH SPINDLES

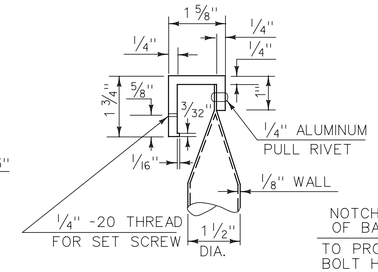

DETAIL A

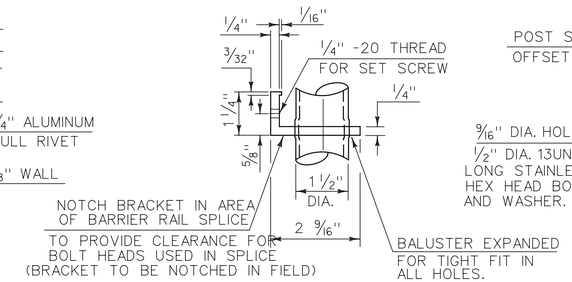

DETAIL B

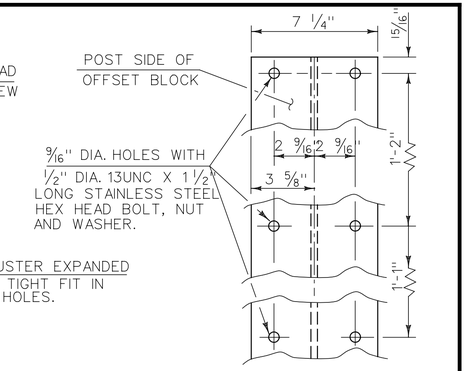

OFFSET BLOCK CONNECTION

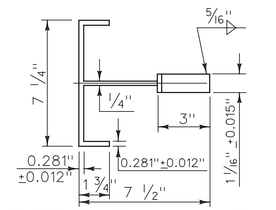

POST PLAN VIEW

THIS REFLECTORIZED ALUMINUM DELINEATOR IS TO BE ERECTED EVERY 30 FEET (OR CLOSEST POST) WITH 2 NO. 8 X 3/4" SELF-TAPPING SCREWS.

DELINEATORS SHALL MEET SPECIFICATION REQUIREMENTS FOR ASTM B209 ALLOY 5052-H32.

REFLECTIVE MATERIAL SHALL MEET THE REQUIREMENTS OF SUBSECTION 750.08 AND SHALL BE OF ENCAPSULATED LENS SILVER OR AMBER. AMBER IS TO BE INSTALLED ON THE DRIVER'S LEFT AND SILVER ON THEIR RIGHT.

ON BRIDGES WITH A SIDEWALK, DELINEATORS ARE NOT TO BE INSTALLED ON THE SIDEWALK SIDE OF THE BRIDGE (I.E. DELINEATORS INSTALLED ONLY ON THE CURB SIDE AND ON THE APPROACH RAIL ON THE CURB SIDE)

PAYMENT SHALL BE SUBSIDIARY TO ALL OTHER ITEMS.

NOTE : RAIL POSTS ARE TO BE SET NORMAL TO GRADE UNLESS OTHERWISE DESIGNATED ON BRIDGE PLANS. ALL DIMENSIONS ARE TYPICAL UNLESS OTHERWISE DESIGNATED ON BRIDGE PLANS.

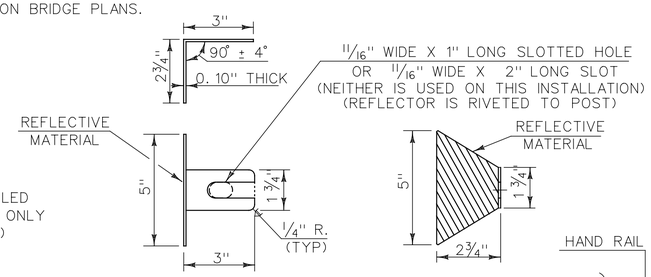

REFLECTOR DETAILS

ALLOWABLE STRESSES:

RAILING : 21,000 PSI TENSION
22,000 PSI COMPRESSION

POSTS : 17,000 PSI TENSION
19,000 PSI COMPRESSION

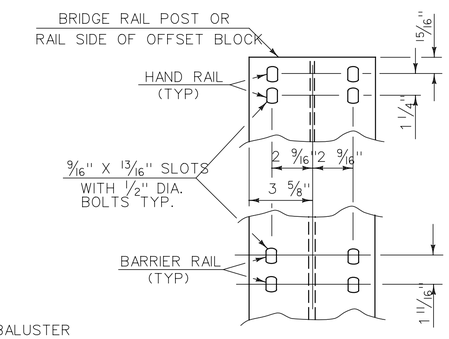

RAIL CONNECTION

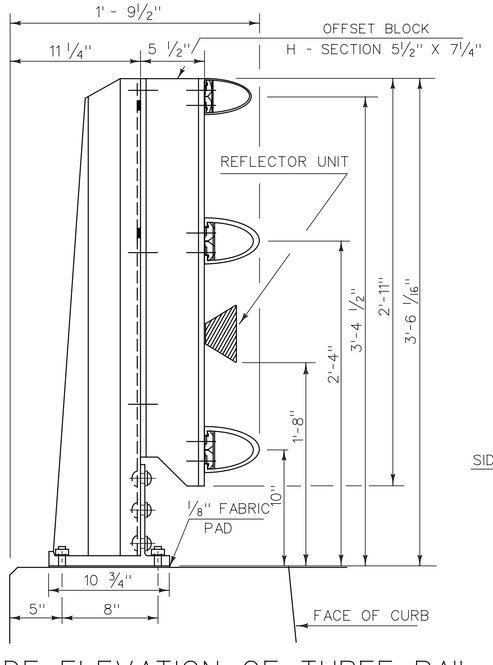

SIDE ELEVATION OF THREE RAIL TO BE USED ON CURB SIDE

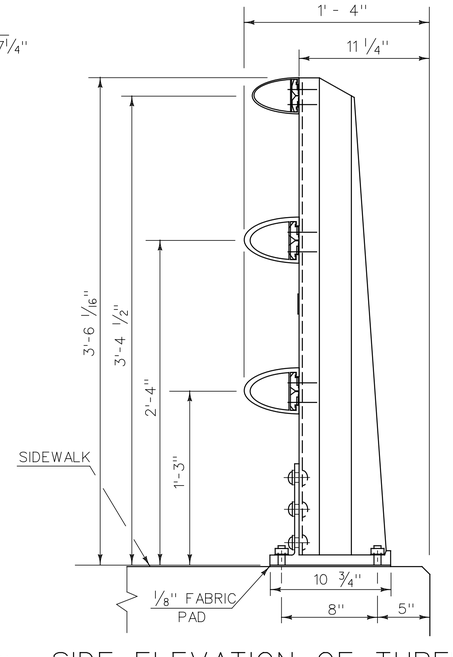

SIDE ELEVATION OF THREE RAIL TO BE USED ON SIDEWALK SIDE

RAIL POST DETAILS ON SUPERSTRUCTURE

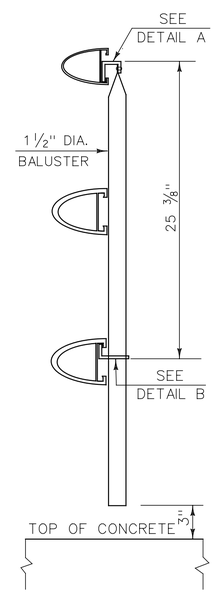

SECTION AA

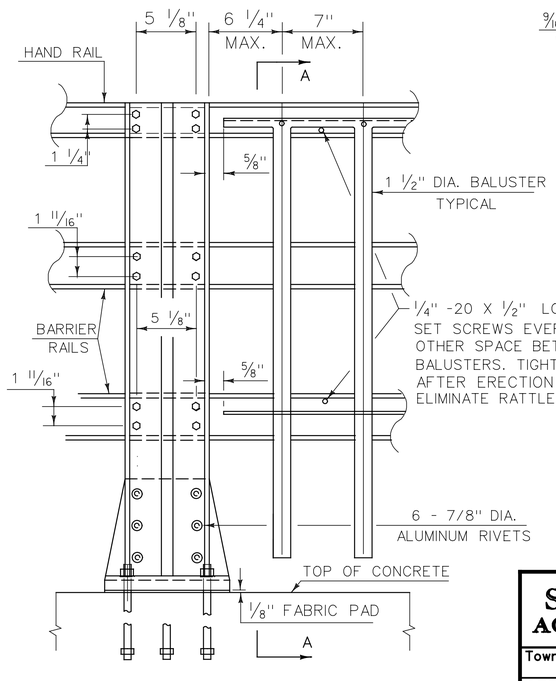

OUTSIDE ELEVATION OF THREE RAIL POST & SPINDLES

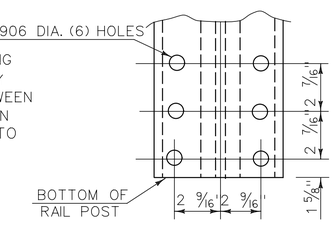

POST BASE BOLT HOLE DETAILS

DETAILS OF SPINDLES FOR ALUMINUM RAILING

VT ALUMINUM RAIL DETAILS SHEET 1
SHEET 24 OF 26
FOR REFERENCE ONLY

STATE OF VERMONT
AGENCY OF TRANSPORTATION

Town Of	Bridge No.
Highway No.	Log Sta. / Surv. Sta.

ALUMINUM BRIDGE RAILING DETAILS

Designed By	Drawn By
Checked By Date	Bridge Design Supervisor Date
PROJECT	PROJECT NO.
I.G.C. Info. /struct/std/sbr191.dgn	sbr191s1.parm
Bridge Sheet No.	Sheet of

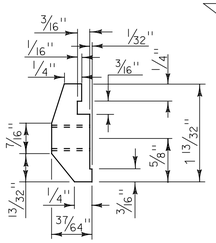

POST CONNECTION HAND RAIL SECTION

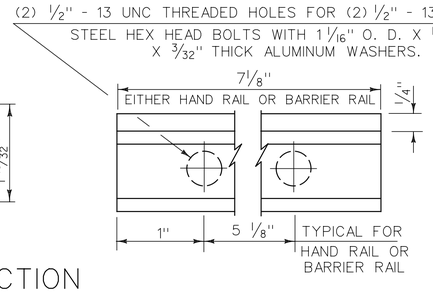

POST CONNECTION ELEVATION

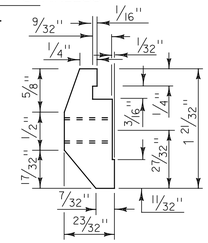

POST CONNECTION BARRIER RAIL SECTION

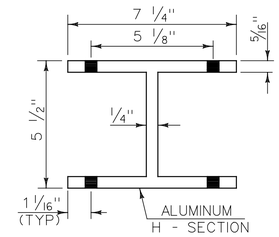

PLAN VIEW OF OFFSET BLOCK

(TO BE USED ON SUPERSTRUCTURE ON CURB SIDE)

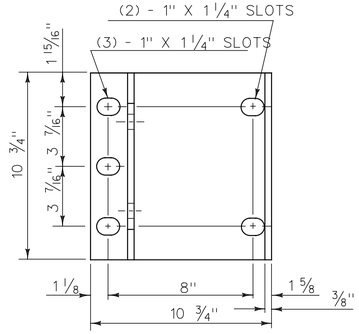

POST BASE PLAN

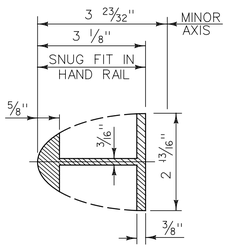

HAND RAIL SPLICE SECTION

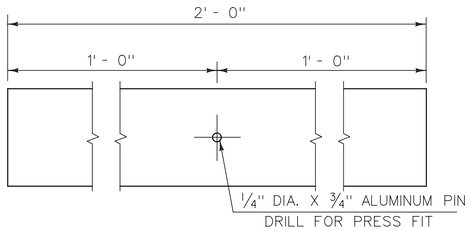

ELEVATION OF HAND RAIL SPLICE BAR

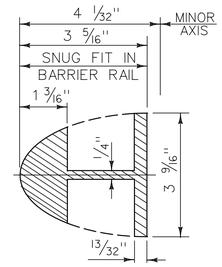

BARRIER RAIL SPLICE SECTION

(SEE SHEET_____ FOR ELEVATION OF BARRIER RAIL SPLICE BAR)

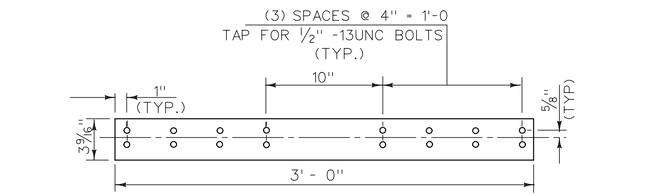

ELEVATION OF STD. BARRIER RAIL SPLICE BAR (FROM BACK)

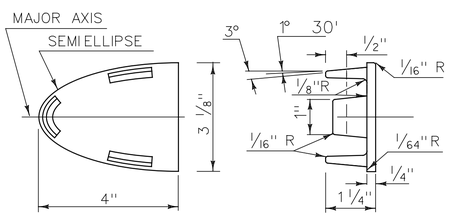

HAND RAIL END CAP

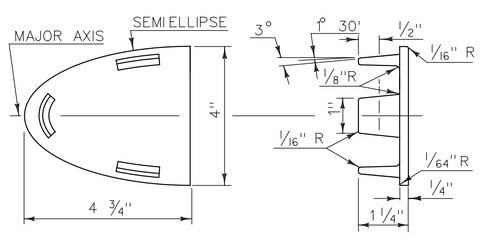

BARRIER RAIL END CAP

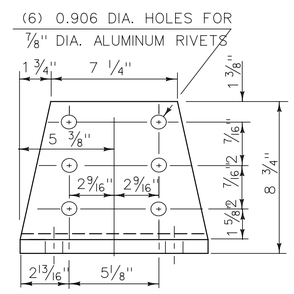

POST BASE FRONT ELEVATION

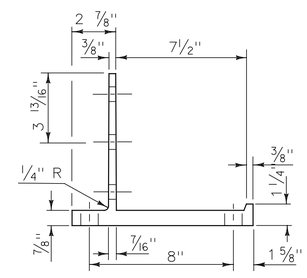

POST BASE SECTION

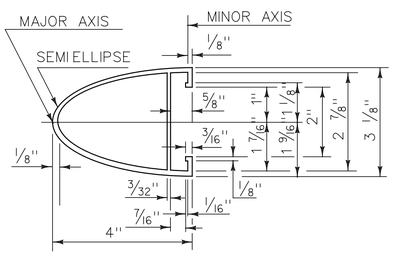

HAND RAIL SECTION

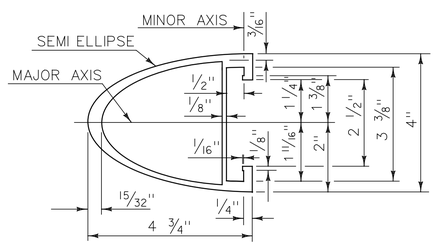

BARRIER RAIL SECTION

(SEE SHEET___ FOR ELEVATION OF BARRIER RAIL)

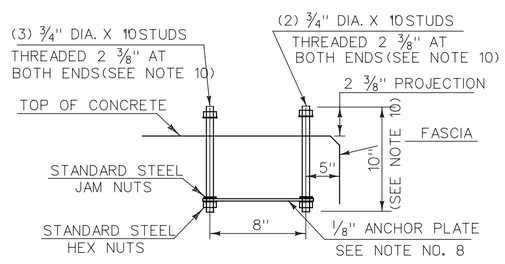

POST ANCHOR ASSEMBLY

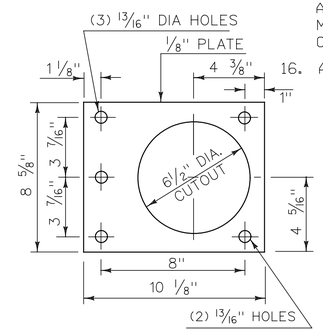

ANCHOR PLATE

VT ALUMINUM RAIL DETAILS SHEET 2 SHEET 25 OF 26 FOR REFERENCE ONLY

NOTES

1. ANCHOR BOLTS, WASHERS AND HEAVY HEX NUTS MAY BE ANY OF THE FOLLOWING:
   A. ASTM A449 GALVANIZED, OR
   B. AASHTO M164 (ASTM A325) GALVANIZED
   C. BOLTS AND WASHERS OF STAINLESS STEEL ASTM A276, TYPE 304 (MINIMUM ULTIMATE STRENGTH OF 100,000 PSI) WITH STAINLESS STEEL NUTS OF ASTM A194, GRADE 8NA.
2. ALUMINUM POSTS, POST BASES, SPLICE BARS, CONNECTION BARS, RAILS AND BALUSTER FRAMES SHALL CONFORM TO ASTM B221 ALLOY 6061-T6 OR ALLOY 6351-T5. MINIMUM ALLOWABLE STRESS F_y = 35,000 PSI.
3. ALUMINUM BALUSTER TUBES SHALL CONFORM TO ASTM B210 ALLOY 6061-T5 OR 6063-T5.
4. ALUMINUM RAIL END CAPS SHALL CONFORM TO ASTM B26 ALLOY 356-T6.
5. THE POST, RAIL, AND OFFSET BLOCK CONNECTION BOLTS SHALL BE EITHER ASTM A193 OR ASTM A320. EITHER ONE SHALL BE CLASS 1, B8 GRADE AISI 304 WITH AN ULTIMATE TENSILE STRENGTH OF 75,000 PSI. NUTS FOR EITHER OF THE ABOVE BOLTS SHALL BE ASTM A194, GRADE 8, STAINLESS STEEL WITH AN ULTIMATE TENSILE STRENGTH OF 75,000 PSI.
6. SET SCREWS FOR ATTACHING BALUSTERS TO RAILING SHALL BE ASTM F880, TYPE 303 MATERIAL.
7. RIVETS SHALL BE COLD DRIVEN HIGH BUTTON HEAD "CONE POINT", CONFORMING TO ASTM B316 ALLOY 6061-T6.
8. THE ANCHOR PLATE FOR THE POST ANCHOR ASSEMBLY SHALL BE ASTM A36 STRUCTURAL STEEL.
9. WELDING SHALL CONFORM TO THE REQUIREMENTS OF SUBSECTION 506.10 USING THE GMAW-INERT GAS PROCESS AND AWS ER 5356 ELECTRODE WIRE.
10. UNLESS OTHERWISE SPECIFIED, ANCHOR BOLTS SHALL BE CAST INTO THE CONCRETE AS DETAILED.
11. WHENEVER FEASIBLE BARRIER RAIL AND HAND RAIL SECTIONS, SHALL BE FULL LENGTH SECTIONS (40' ±) AND WHEN POSSIBLE SHALL BE ATTACHED TO THREE POSTS. RAILS SHALL BE SPLICED AT EACH DECK JOINT AND INTERMITTENTLY AS REQUIRED. SPLICES SHALL OCCUR WITHIN THE SAME PANEL.
12. ENDS OF RAILS SHALL BE CUT SQUARE AND GROUND FREE OF BURRS OR RAGGED EDGES. EXPOSED ENDS SHALL BE CAPPED.
13. THE CONCRETE CONTACT SURFACE AT THE POST BASE SHALL BE BUSH HAMMERED AND/OR SHIMMED AS REQUIRED FOR PROPER POST ALIGNMENT. POST HEIGHT ADJUSTMENTS LESS THAN 1/4" SHALL BE WITH 1/16" AND 1/8" SHIMS. CORRECTIONS EXCEEDING 1/4" SHALL BE WITH EPOXY MORTAR CONFORMING WITH SECTION 530. FABRIC BEARING PADS AND ANY REQUIRED SHIMS OR EPOXY MORTAR ARE SUBSIDIARY TO THE UNIT PRICE BID FOR THE RAILING.
14. SHIMS AND 1/8" FABRIC BEARING PADS SHALL BE 10 3/4" SQUARE WITH SLOTTED HOLES SIZED AND LOCATED THE SAME AS THE POST BASE DETAIL. FABRIC BEARING PADS SHALL CONFORM TO SUBSECTION 731.01 OR 731.02, SHIM MATERIAL SHALL BE ASTM B 209 ALLOY 1100-0.
15. EXTRUDED SECTIONS ARE DETAILED TO COMPLY WITH CURRENT AASHTO-AGC-ARTBA STANDARDS. MINOR VARIATIONS OF THE DETAILS SHOWN MAY BE CONSIDERED PROVIDING THEY DO NOT REDUCE THE STRENGTH CAPACITY OF THE RAIL SYSTEM.
16. ALUMINUM WASHERS SHALL BE ASTM B209 ALLOY ACLAD 2024-T4.

STATE OF VERMONT
AGENCY OF TRANSPORTATION

Town Of	Bridge No.
Highway No.	Log Sta. / Surv. Sta.

ALUMINUM BRIDGE RAILING DETAILS

Designed By	Drawn By
Checked By Date	Bridge Design Supervisor Date
PROJECT	PROJECT NO.
I.G.C. Info. /struct/std/sbr191.dgn	sbr191s2.1parm
Bridge Sheet No.	Sheet of

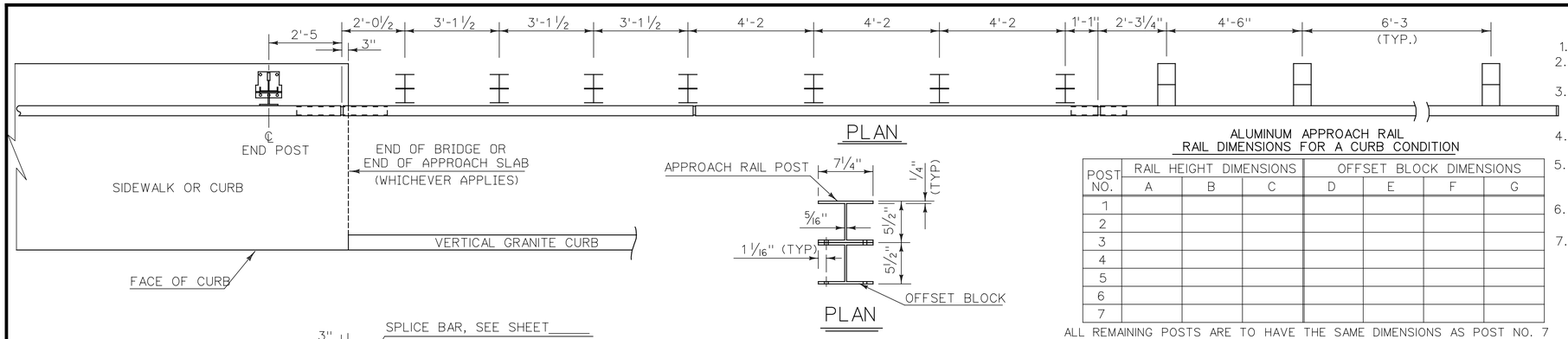

PLAN

PLAN

NOTES

1. POST 1 THROUGH 7 SHALL BE EXTRUDED ALUMINUM.
2. ALL STRUCTURAL STEEL SHALL BE AASHTO M270 GRADE 36 GALVANIZED AFTER FABRICATION.
3. ALL ITEMS NOT OTHERWISE INDICATED SHALL MEET THE SPECIFICATION REQUIREMENTS OF THE STANDARD SHEETS ON WHICH THEY ARE DETAILED.
4. SEE STANDARD G-1 FOR STEEL BEAM GUARD RAIL DETAILS. SEE SHEETS _____ AND _____ FOR ALUMINUM BRIDGE RAILING DETAILS.
5. THE COST OF ALL MATERIALS AND LABOR FOR THE SPLICE BETWEEN THE ALUMINUM APPROACH RAILING AND THE STEEL BEAM GUARD RAIL SHALL BE SUBSIDIARY TO ITEM 621.74, ALUMINUM APPROACH RAILING.
6. DETAILS ARE SHOWN FOR TRANSITION TO A 3 RAIL ALUMINUM BRIDGE RAILING.
7. DIMENSIONS SHOWN ARE FROM A REFERENCE LINE AT THE FACE OF POST FOR A NORMAL CROWNED SECTION. APPROPRIATE CORRECTIONS SHALL BE MADE FOR CROSS SLOPES OTHER THAN A NORMAL SECTION.

ALUMINUM APPROACH RAIL
RAIL DIMENSIONS FOR A CURB CONDITION

POST NO.	RAIL HEIGHT DIMENSIONS			OFFSET BLOCK DIMENSIONS			
	A	B	C	D	E	F	G
1							
2							
3							
4							
5							
6							
7							

ALL REMAINING POSTS ARE TO HAVE THE SAME DIMENSIONS AS POST NO. 7

ALUMINUM APPROACH RAIL
RAIL DIMENSIONS FOR A SIDEWALK CONDITION

POST NO.	RAIL HEIGHT DIMENSIONS			OFFSET BLOCK DIMENSIONS			
	A	B	C	D	E	F	G
1							
2							
3							
4							
5							
6							
7							

ALL REMAINING POSTS TO HAVE THE SAME DIMENSIONS AS POST NO. 7

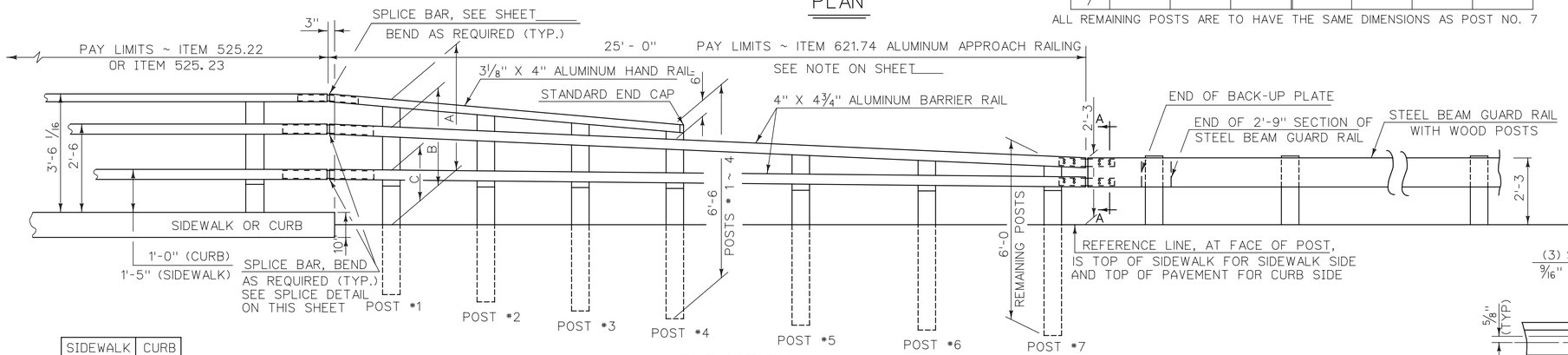

ELEVATION

	SIDEWALK SIDE	CURB SIDE
"X"		
"Y"		
"Z"		

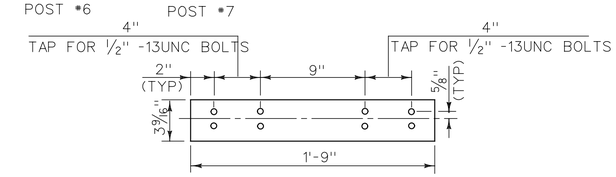

ELEVATION OF BARRIER RAIL SPLICE BAR TO BE USED AT TRANSITION BETWEEN APPROACH RAIL & GUARD RAIL (FROM BACK)

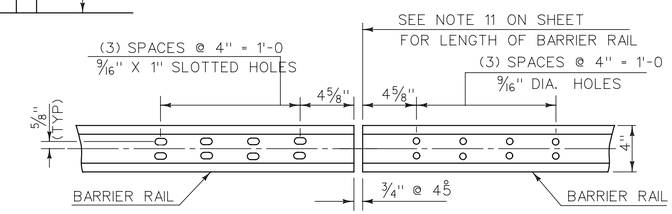

ELEVATION OF BARRIER RAIL (FROM BACK) AT ALL INTERMEDIATE RAIL SPLICES

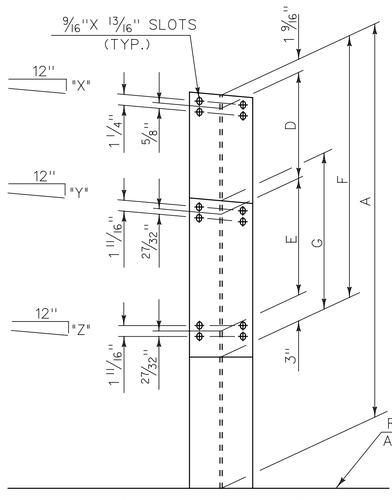

FRONT ELEVATION

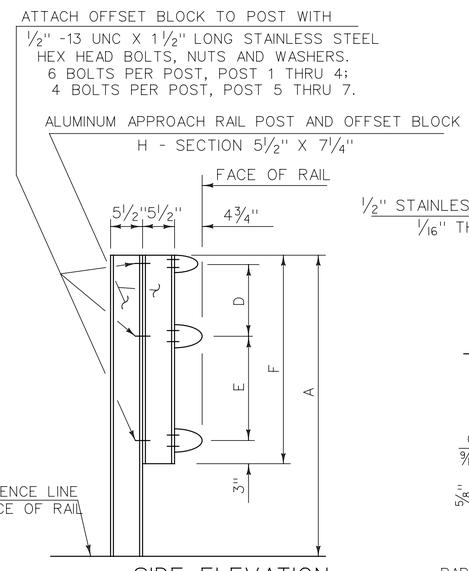

SIDE ELEVATION

APPROACH RAIL DETAILS

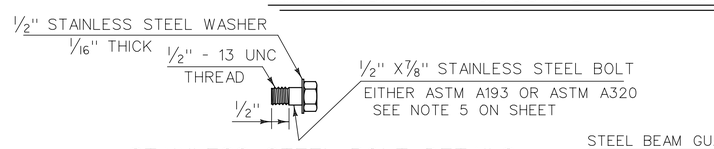

STAINLESS STEEL BOLT DETAILS

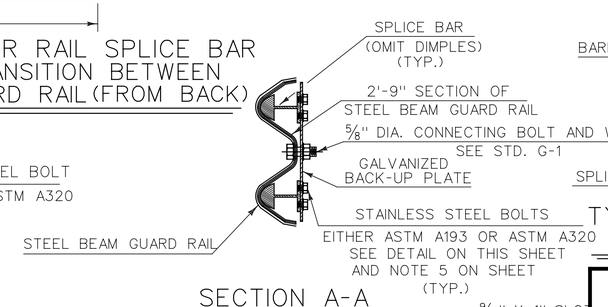

SECTION A-A

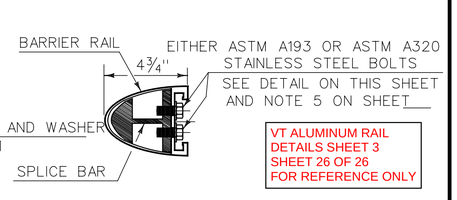

TYPICAL SECTION THROUGH BARRIER RAIL SPLICE

VT ALUMINUM RAIL
DETAILS SHEET 3
SHEET 26 OF 26
FOR REFERENCE ONLY

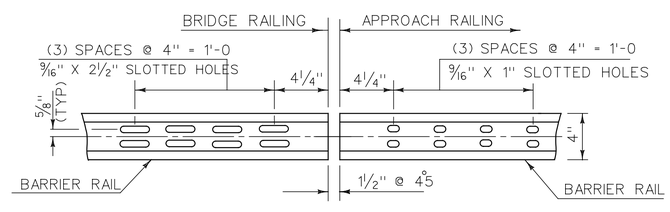

ELEVATION OF BARRIER RAIL (FROM BACK)

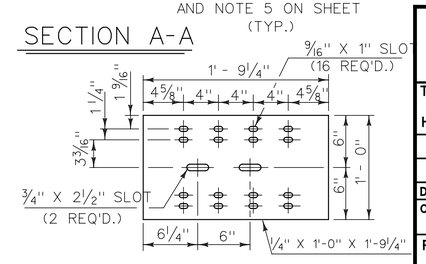

BACK-UP PLATE DETAILS

STATE OF VERMONT
AGENCY OF TRANSPORTATION

Town Of	Bridge No.
Highway No. _____	Log Sta.
	Surv. Sta.

ALUMINUM APPROACH RAILING DETAILS

Designed By	Drawn By
Checked By Date	Bridge Design Supervisor Date
PROJECT	PROJECT NO.
I.G.C. Info. /struct/std/sbr19l.dgn	sbr19ls3.lparm
Bridge Sheet No.	Sheet of